Front Dimensions

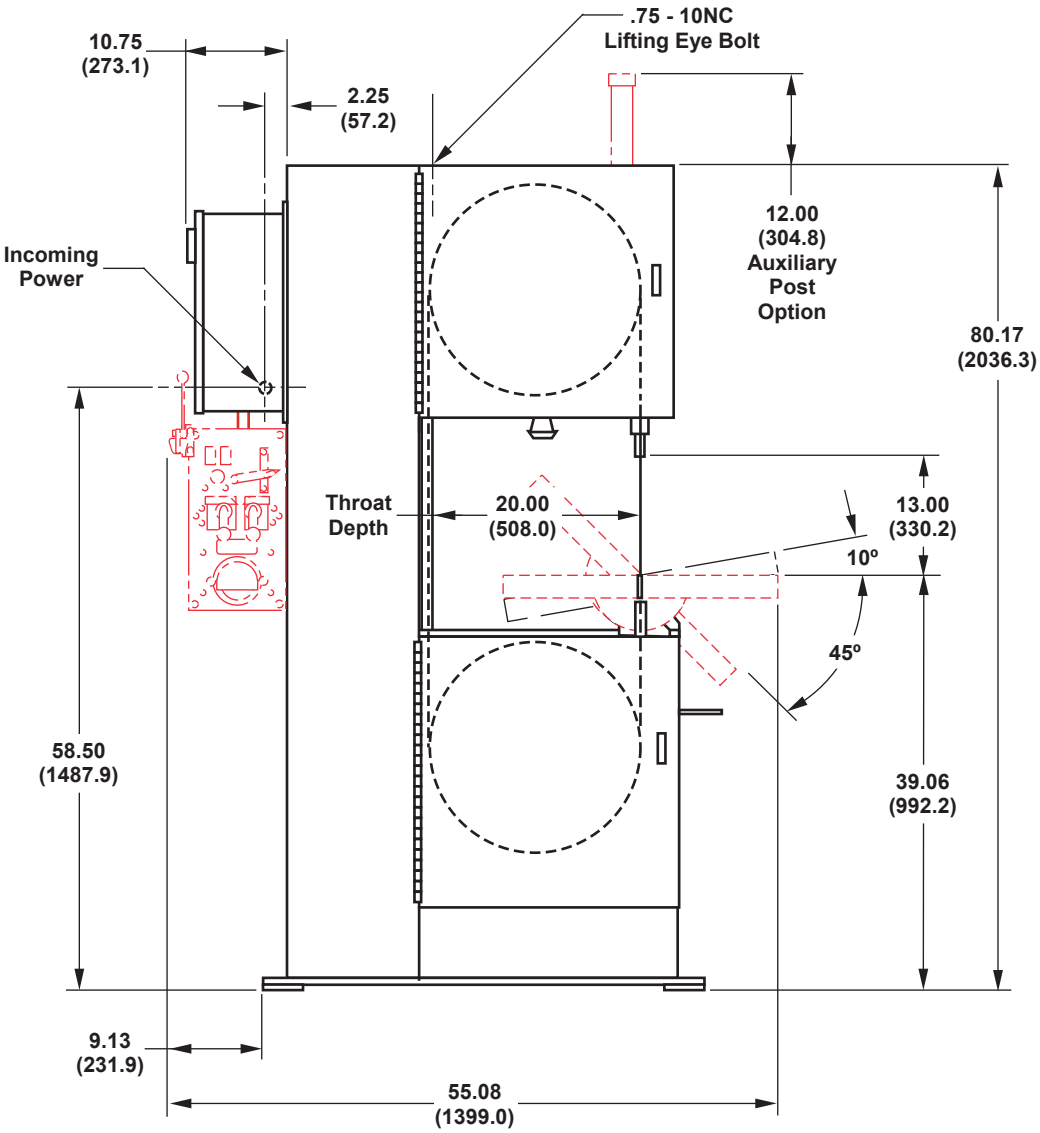
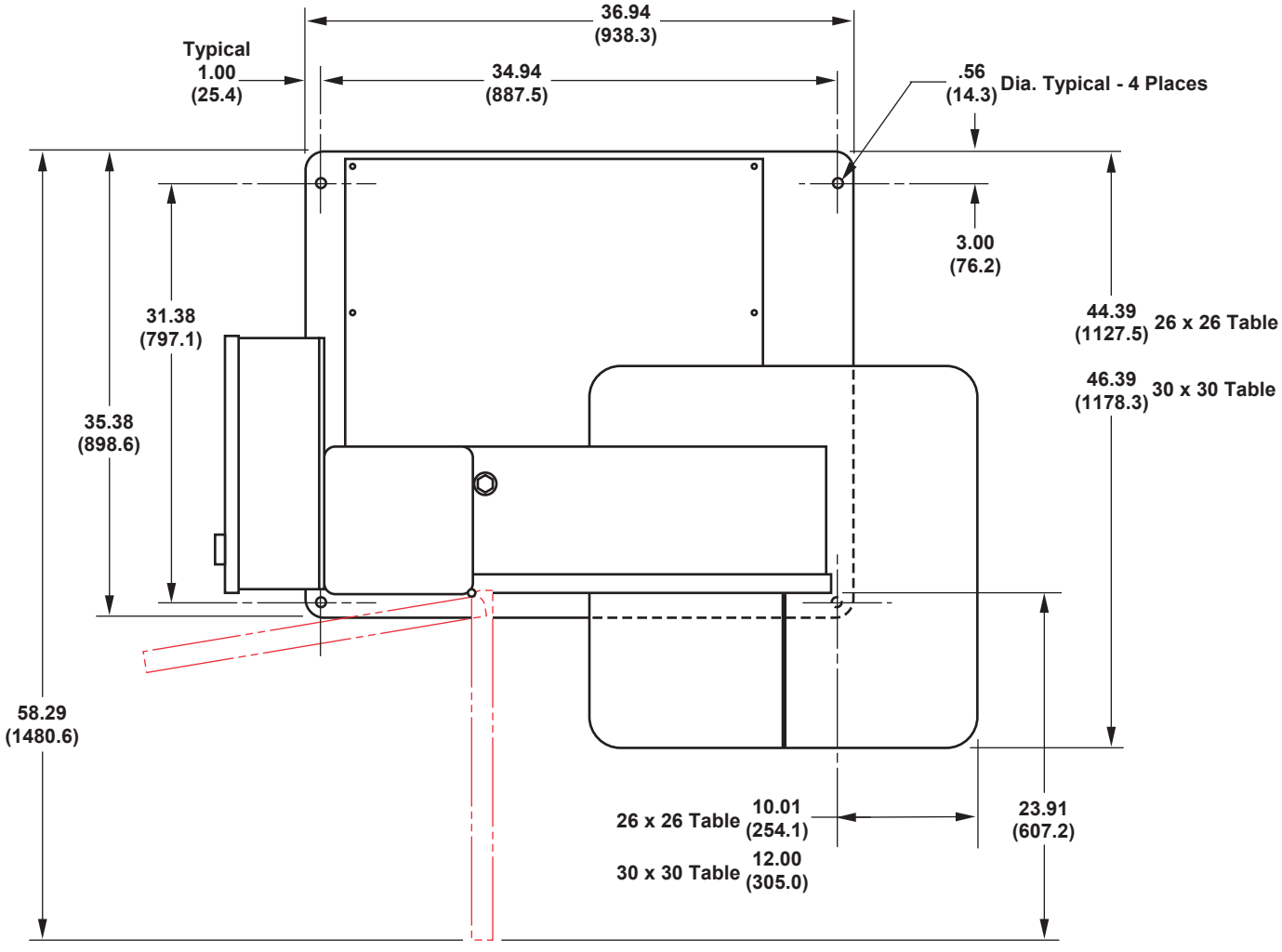
Top Dimensions