JET FA ELECTRIC HOIST PRODUCT PARTS LIST

FA1-1S FA1-2S FA1-3S FA1-5S ELECTRIC HOIST PRODUCT

FA1-0.5S,FA-0.5S ELECTRIC HOIST PRODUCT

FA-1S FA-2S FA-3S FA-5S ELECTRIC HOIST PRODUCT

ELECTRIC HOIST TOP HOOK 1/2 1 2 3 TON

ELECTRIC HOIST TOP HOOK 5 TON

ELECTRIC HOIST BOTTOM HOOK 1/2 1 TON

ELECTRIC HOIST BOTTOM HOOK 2 TON

ELECTRIC HOIST BOTTOM HOOK 3 TON

ELECTRIC HOIST BOTTOM HOOK 5 TON

FA1-1S FA1-0.5S FA1-2S FA1-3S FA1-5S ELECTRIC HOIST ELECTRICAL COMPONENTS

FA-0.5S FA-1S FA-2S FA-3S FA-5S ELECTRIC HOIST ELECTRICAL COMPONENTS

FA ELECTRIC HOIST PUSH BUTTON AND POWER CABLE

FA1-1S FA1-2S FA1-3S FA1-5S CAPACITOR CHART

FA1-1S FA1-2S FA1-3S FA1-5S ELECTRIC HOIST PRODUCT 107203,107204,107205,107206

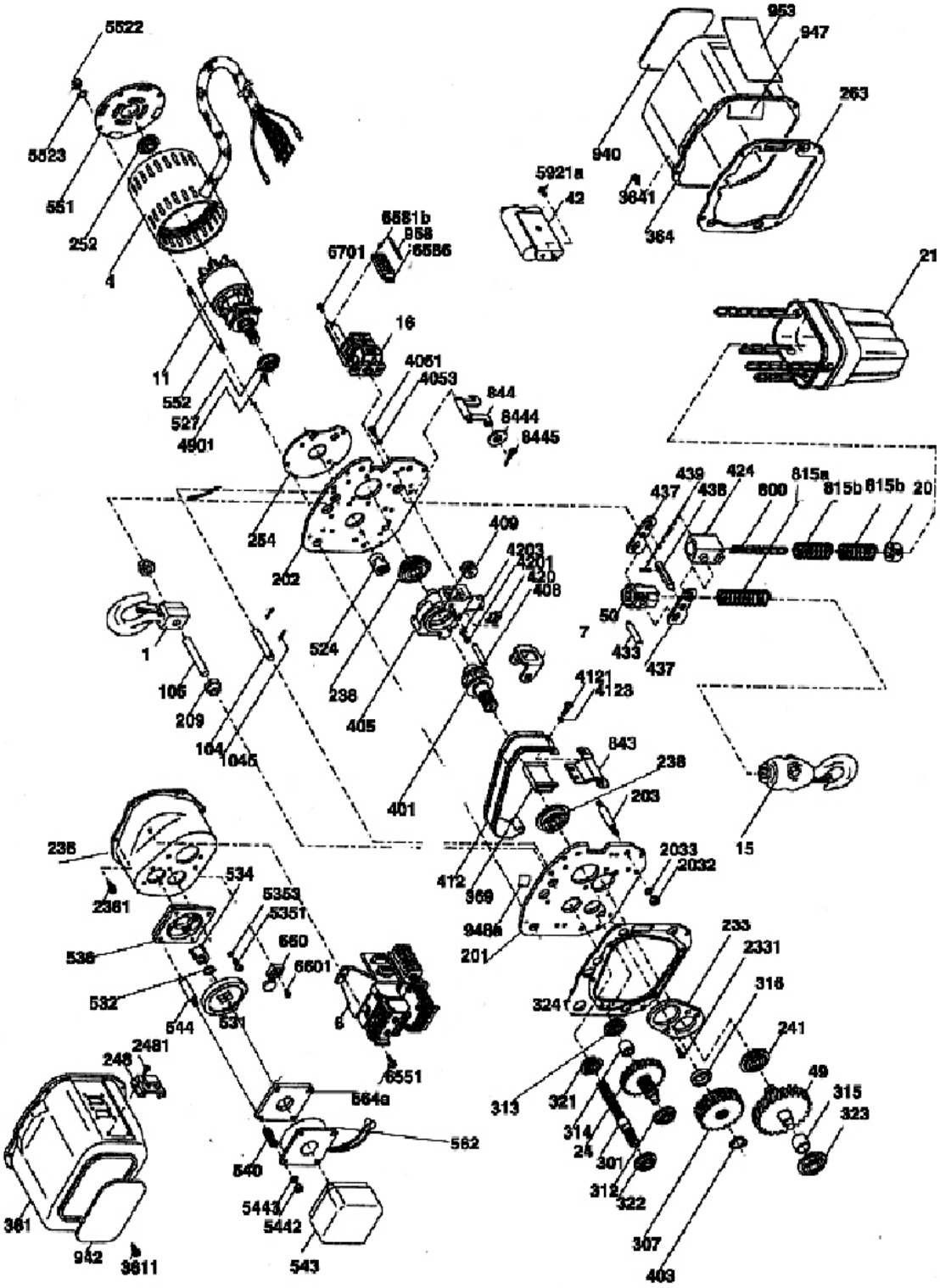

FA1-1S FA1-2S FA1-3S FA1-5S ELECTRIC HOIST PRODUCT 107203,107204,107205,107206

REF	PART	DESCRIPTION	REQ
1		TOP HOOK ASSY (SEE HOOK CHART)	1
4	PEL-04-21	REWIND STATOR 115 230 VOLT	1
4	PEL-04-21R	REWIND STATOR 115 230 VOLT (EXCHANGE)	1
4	PEL-04-2R	REWIND STATOR 115 230 VOLT EXCHANGE OLD STYLE	1
4	PEL-4-2	MOTOR CASE ASSY	1
6		ELECTRIC EQUIPMENT ASSY SEE ELECTRICAL PARTS	
11	PEL-11-21	ROTOR ASSY NEW STYLE	1
15		BOTTOM HOOK ASSY (SEE HOOK CHART)	1
16	PEL-16-1	LIMIT SWITCH SET	1
20	PEL-20-2	CHAIN STOPPER ASSY FA1-2S REQUIRE 2	1
21	PEL21-1	CHAIN BUCKET # 1	1
21	PEL-21-2	CHAIN BUCKET # 2	1
21	PEL-21-3	CHAIN BUCKET # 3	1
21	PEL-21-4	CHAIN BUCKET # 4	1
21	PEL-21-5	CHAIN BUCKET # 5	1
24	PEL-24-2	SECOND AND THIRD GEAR SET (OLD STYLE)	1
24	PEL-24-3	SECOND AND THIRD GEAR ASSY (NEW)	1
42	PEL-42-NW	SINGLE PHASE CAPACITOR ASSY NEW STYLE	
		CONTAINS NEW STYLE BRACKET WITH CAPACITORS	1
	PEL-597A-2	CAPACITOR OLD STYLE A 130MF	2
	PEL-592A-2	CAPACITOR HOLDER A OLD STYLE	1
	PEL-592B-1	CAPICITOR HOLDER B OLD STYLE	1
	PEL-592A-2N	CAPACITOR HOLDER A NEW STYLE	1
	PEL-592B-1N	CAPICITOR HOLDER B NEW STYLE	1
49	PEL-49-2	FOURTH AND FIFTH GEAR SET (OLD STYLE)	1
49	PEL-49-4	FOURTH AND FIFTH GEAR SET (NEW STYLE)	1
50	PEL-50-2	OPERATING ELEMENT “A” ASSEMBLY	1
104	PEL-104-1	TOP HOOK STOPPER PIN (1 & 2 TON ONLY)	1
105	PEL-105-2	1-TON TOP HOOK PIN	1
105	PEL-105-3	2-TON TOP HOOK PIN	1
105	PEL-105-4	3 & 5 TON TOP HOOK PIN	1
133 NS	PEL-133-1	CHAIN ANCHOR PIN (2,3,& 5 TON ONLY)	1
134 NS	PEL-134-1	CHAIN ANCHOR PIN PLATE (2,3,& 5 TON ONLY)	1
135 NS	PEL-135-1	CHAIN ROLLER (3 & 5 TON ONLY)	1
201	PEL-201-2	GEAR SIDE PLATE	1
202	PEL-202-2	MOTOR SIDE PLATE	1
203	PEL-203-2	STAY BOLT “A”	3
204	PEL-204-1	STAY BOLT “B”	1
207	PEL-207-1	METAL HANGER	1
209	PEL-209-2	1-TON TOP HOOK REINFORCEMENT	2
209	PEL-209-3	2-TON TOP HOOK REINFORCEMENT	2
215	PEL-215-1	STAY PIPE (1 & 2 TON ONLY)	1
233	PEL-233-2	FLANGE “B”	1
236	PEL-236-2	GEAR CASE	1
238	PEL-B-2	BALL BEARING “2” (*QTY PER HOIST)	1
241	PEL-B-6	BALL BEARING “3”	1
248	PEL-248-1	PUSHBUTTON HANGER	1
252	PEL-B-43	BALL BEARING “7”	1
253	PEL-253-2	MOTOR CASE PACKING	1
254	PEL-254-2	LOCATION PLATE	1

FA1-1S FA1-2S FA1-3S FA1-5S ELECTRIC HOIST PRODUCT 107203,107204,107205,107206

REF	PART	DESCRIPTION	REQ
301	PEL-301-2	FIRST GEAR SHAFT (OLD STYLE)	1
301	PEL-301-3	FIRST GEAR SHAFT (NEW STYLE)	1
307	PEL-307-2	SIXTH GEAR	1
312	PEL-B-5	BALL BEARING “10”	1
313	PEL-B-5	BALL BEARING “10”	1
314	PEL-314-2	THIRD GEAR COLLAR	1
315	PEL-315-2	FIFTH GEAR COLLAR	1
316	PEL-316-2	LIFTWHEEL COLLAR	1
321	PEL-B-4	BALL BEARING “4”	1
322	PEL-B-4	BALL BEARING “4”	1
323	PEL-B-6	BALL BEARING “5”	1
324	PEL-324-2	GEAR CASE PACKING	1
361	PEL-361-2	GEAR SIDE COVER	1
364	PEL-364-2	MOTOR SIDE COVER	1
369	PEL-369-1	LEAD WIRE RUBBER PROTECTOR	1
401	PEL-401-2	LIFTWHEEL	1
403	PEL-R-2	SNAP RING	1
405	PEL-405-2	CHAIN GUIDE NEW STYLE NO LONGER USES 408 ,409	1
XX	PEL-408-1	ROLLER PIN (OLD STYLE NOT SHOWN)	1
XX	PEL-409-1	ROLLER (OLD STYLE NOT SHOWN)	1
412	PEL-412-2	1 & 2 TON SHEAVE COVER	1
412	PEL-412-3	3 & 5 TON SHEAVE COVER	1
420	PEL-420-1	STRIPPER	1
424	PEL-424-2	OPERATING ELEMENT “B”	1
433	PEL-433-1	OPERATING ELEMENT “A” STOPPER	1
437	PEL-437-2	OPERATING PLATE	2
438	PEL-438-1	OPERATING HEX.SHAFT	1
53	PEL-524-3	MOTOR SHAFT JOINT ASSY	1
	PEL-524-3A	MOTOR SHAFT JOINT PLASTIC PIECE	1
	PEL-524-1	MOTO SHAFT JOINT	1
527	PEL-B-4	BALL BEARING “6”	1
531A	PEL-531-3	FRICTION PAD A	1
531A	PEL-531-4	FRICTION PAD B	1
532	PEL-R-3	SNAP RING	1
54	PEL-534-1	SQUARE HUB	1
535	PEL-535-1	BRAKE HOLDER	1
540	PEL-540-2	BRAKE SPRING	4
543	PEL-543-1	BRAKE COVER	1
544	PEL-544-3	BRAKE STAY BOLT	4
551	PEL-551-2	MOTOR BRACKET	1
552	PEL-552-2	MOTOR STAY BOLT	4
562	PEL-562-5	BRAKE COIL	1
564A	PEL-564A-1	ARMATURE “A”	1
564B	PEL-564B-1	ARMATURE “B”	1
604 NS	PEL-604-1	CHAIN BOLT (2 TON ONLY)	1
658B	PEL-658B-2	TERMINAL BOARD “B”	1
660	PEL-660-3	RECTIFIER	1
800		LOAD CHAIN (SEE CHAIN CHART)	
813	PEL-813-1	COIL SPRING PLATE (5 TON ONLY)	1
815A	PEL-815-1	COIL SPRING “A” (1 TON ONLY)	1

FA1-1S FA1-2S FA1-3S FA1-5S ELECTRIC HOIST PRODUCT 107203,107204,107205,107206

REF	PART	DESCRIPTION	REQ
815A	PEL-815-3	COIL SPRING “A” (2,3,& 5 TON ONLY)	1
815B	PEL-815-2	COIL SPRING “B”	2
815C	PEL-815-4	COIL SPRING “C” (3 & 5 TON ONLY)	2
817	PEL-817-3	CHAIN GAUGE	1
818	PEL-818-1	CHAIN ANCHOR (2 TON ONLY)	1
843	PEL-843-1	CHAIN CONTAINER SUPPORT METAL	1
844	PEL-844-1	CHAIN CONTAINER HANGER	1
940	PEL-940-*	NAMEPLATE (SEE NAMEPLATE CHART)	1
942	PEL-942-7	1-TON TYPE NAMEPLATE	1
942	PEL-942-8	2-TON TYPE NAMEPLATE	1
942	PEL-942-9	3-TON TYPE NAMEPLATE	1
942	PEL-942-10	5-TON TYPE NAMEPLATE	1
947	PEL-947 -1	DIAGRAM SEAL	1
948A	PEL-948A-1	SEAL “A” (*1-TON QTY 2)	1
948A	PEL-948A-1	SEAL “A” (*1-TON QTY 1)	1
949 NS	PEL-949-1	WARNING SEAL	1
953	PEL-953-2	WARNING SEAL	1
958	PEL-958-1	TERMINAL NO. SEAL 7 THRU 12	1
1045	PEL-P-2	COTTER PIN (1 TON ONLY)	2
1341 NS	PEL-S-1	BOLT W/SPRING WASHER (2,3,& 5 TON ONLY)	2
2032	PEL-N-5	NUT	6
2033	PEL-W-5	SPRING WASHER	6
2042	PEL-N-5	NUT	2
2043	PEL-W-5	SPRING WASHER	2
2044	PEL-2044-1	PLAIN WASHER	2
2331	PEL-H-8	BOLT	2
2361	PEL-S-14	BOLTWITH SPRINGWASHER	6
2481	PEL-C-10	SCREW WITH SPRING WASHER	2
3611	PEL-S-1	BOLTWITH SPRINGWASHER	4
3641	PEL-S-1	BOLTWITH SPRINGWASHER	4
4051	PEL-H-5	BOLTWITH HEX HOLE	4
4053	PEL-W-3	SPRING WASHER	4
4121	PEL-H-4	BOLTWITH HEX HOLE	2
4123	PEL-W-2	SPRING WASHER	2
4201	PEL-H-3	BOLTWITH HEX HOLE	2
4203 NS	PEL-W-1	SPRING WASHER	2
5351	PEL-H-4	BOLTWITH HEX HOLE	4
5353	PEL-W-2	SPRING WASHER	4
5442	PEL-N-4	NUT	4
5443	PEL-W-3	SPRING WASHER	4
5522	PEL-N-3	CAP NUT	4
5523	PEL-W-2	SPRING WASHER	4
5921A	PEL-S-1	BOLTWITH SPRINGWASHER	2
6042 NS	PEL-N-8	NUT (2 TON ONLY)	1
6045 NS	PEL-P-9	COTTER PIN (2 TON ONLY)	1
6551	PEL-S-1	BOLTWITH SPRINGWASHER	3
6581B	PEL-C-9	SCREW WITH PLAIN AND SPRING WASHER	2
6601	PEL-C-11	SCREW WITH SPRING WASHER	1
6701	PEL-S-15	BOLT WITH PLAIN AND SPRING WASHER	2

FA1-0.5S,FA-0.5S ELECTRIC HOIST PRODUCT
107202,107212,107262

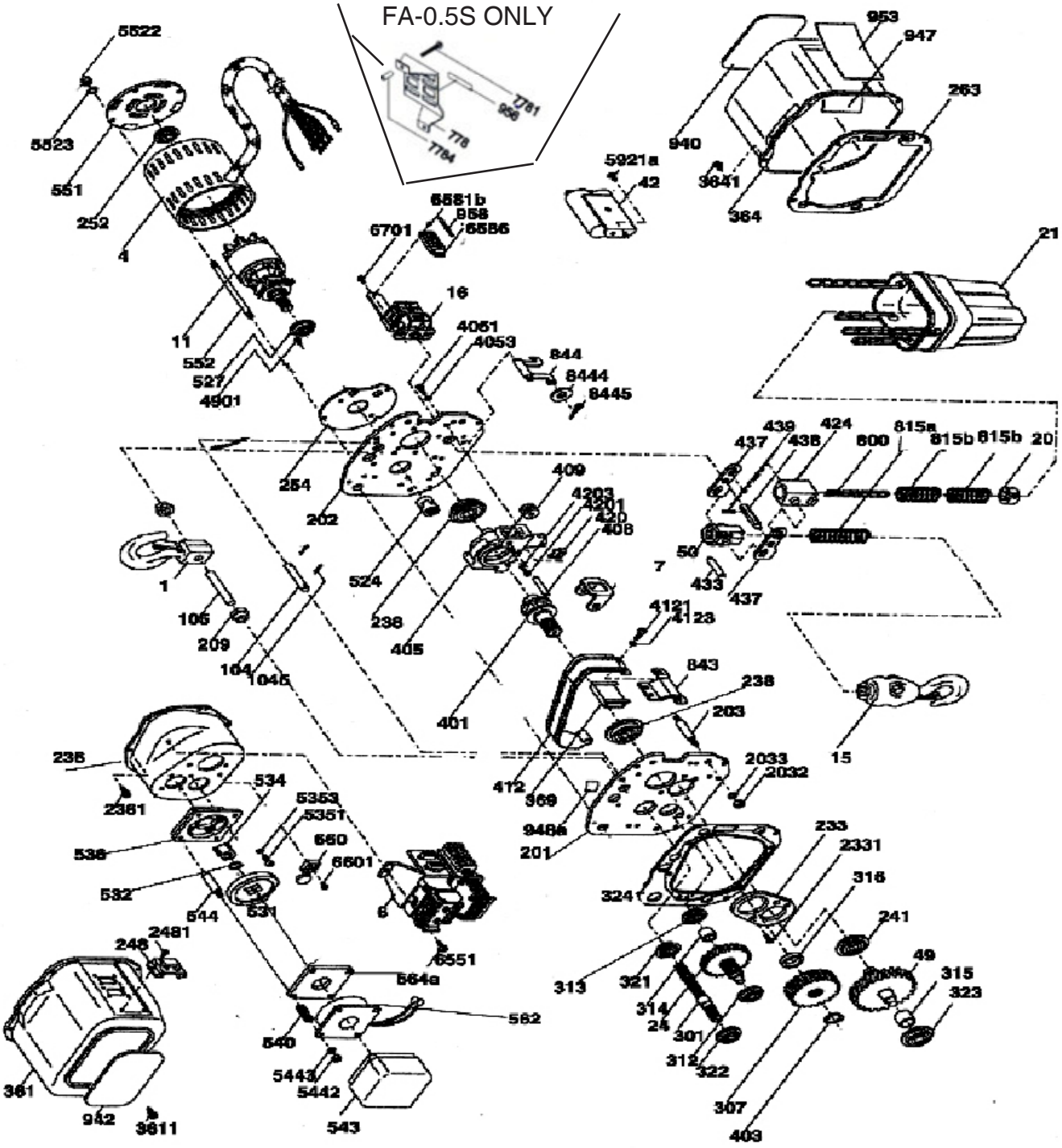

FA1-0.5S,FA-0.5S ELECTRIC HOIST PRODUCT 107202,107212,107262

REF	PART	DESCRIPTION	REQ
1	PEL-01-1	TOP HOOK ASSY	1
4	PEL-04-1	MOTOR CASE ASSY FA1-1/2S	1
4	PEL-04-1R	MOTOR CASE ASSY FA1-1/2S EXCHANGE	1
	PEL-04-3	MOTOR CASE ASS FA-1/2S 230/460	1
	PEL-04-3R	MOTOR CASE ASS FA-1/2S 230/460 EXCHANGE	1
	PEL-04-9	MOTOR CASE ASSY FA-1/2S 575V	1
	PEL-04-9R	MOTOR CASE ASSY FA-1/2S 575V EXCHANGE	1
6		SEE ELECTRIC EQUIPMENT ASSY	1
11	PEL-11-1	ROTOR ASSY	1
15	PEL-15-1	BOTTOM HOOK ASSY (SEE HOOK CHART)	1
15	PEL-601-1	BOTTOM HOOK W LACH	1
16	PEL-16-3	LIMIT SWITCH 575V FA-1~5S	1
16	PEL-16-2	LIMIT SWITCH 230/460V FA E/H	1
16	PEL-16-1	LIMIT SWITCH 115/230V FA1 E/H	1
20	PEL-20-1	CHAIN STOPPER ASSY	1
21	PEL21-1	CHAIN BUCKET # 1	1
21	PEL-21-2	CHAIN BUCKET # 2	1
21	PEL-21-3	CHAIN BUCKET # 3	1
21	PEL-21-4	CHAIN BUCKET # 4	1
21	PEL-21-5	CHAIN BUCKET # 5	1
24	PEL-24-1	SECOND AND THIRD GEAR SET	1
42	PEL-592A-1	CAPACITOR HOLDER “A” FA1-0.5S	1
42	PEL-592B-1	CAPACITOR HOLDER “B” FA1-0.5S	1
42	PEL-597A-1	CAPACITOR “A” 40F FA1-0.5S	1
42	PEL-597B-1	CAPACITOR “B” 80F FA1-0.5S	1
42	PEL-C-6	SCREW	1
42	PEL-W-7	SPRING WASHER	1
49	PEL-49-3	OVERLOAD LIMITER GEAR ASSY (MODIFICATION)	1
50	PEL-50-1	OPERATING ELEMENT “A” ASSY	1
104	PEL-104-1	TOP HOOK STOPPER PIN	1
105	PEL-105-1	TOP HOOK PIN	1
201	PEL-201-1	GEAR SIDE PLATE	1
202	PEL-202-1	MOTOR SIDE PLATE	1
203	PEL-203-1	STAY BOLT “A”	4
207	PEL-207-1	METAL HANGER	1
209	PEL-209-1	METAL REINFORCEMENT	2
233	PEL-233-1	FLANGE “B”	1
236	PEL-236-1	GEAR CASE	1
238	PB6205-2ZNR	BALL BRG	2
241	PB6203-2ZNR	BALL BRG	1
248	PEL-248-1	PUSHBUTTON HANGER	1
252	PEL-B-3	BALL BRG “7”	1
253	PEL-253-1	MOTOR CASE PACKING	1
254	PEL-254-1	LOCATION PLATE	1
301	PEL-301-1	FIRST GEAR SHAFT	1
307	PEL-307-1	SIXTH GEAR	1
312	PEL-B-7	BALL BRG “10”	1
313	PEL-B-7	BALL BRG “10”	1
314	PEL-314-1	THIRD GEAR COLLAR	1

FA1-0.5S,FA-0.5S ELECTRIC HOIST PRODUCT 107202,107212,107262

REF	PART	DESCRIPTION	REQ
315	PEL-315-1	FIFTH GEAR COLLAR	1
316	PEL-316-1	LIFT WHEEL COLLAR	1
321	PEL-B-4	BALL BRG “4”	1
322	PEL-B-4	BALL BRG “4”	1
323	PEL-B-5	BALL BRG “5”	1
324	PEL-324-1	GEAR CASE PACKING	1
361	PEL-361-1	GEAR SIDE COVER	1
364	PEL-364-1	MOTOR SIDE COVER	1
369	PEL-369-1	LEAD WIRE RUBBER PROTECTOR	1
401	PEL-401-1	LIFT WHEEL	1
403	PEL-R-1	SNAP RING	1
405	PEL-405-1	CHAIN GUIDE	1
408	PEL-408-1	ROLLER PIN	1
409	PEL-409-1	ROLLER	1
412	PEL-412-1	SHEAVE COVER	1
420	PEL-420-1	STRIPPER	1
424	PEL-424-1	OPERATING ELEMENT “B”	1
433	PEL-433-1	OPERATING ELEMENT “A” STOPPER	1
437	PEL-437-1	OPERATING PLATE	2
438	PEL-438-1	OPERATING HEX.SHAFT	1
439	PEL-P-1	OPERATING HEX.SHAFT PIN	1
524	PEL-524-2	MOTOR SHAFT JOINT ASSY	1
524-2	PEL-524-2A	MOTOR SHAFT JOINT PLASTIC PIECE	1
527	PEL-B-4	BALL BEARING “6”	1
531	PEL-531-3	FRICTION PAD FA1-0.5S FA1-1S FA1-2S FA1-3S	1
531	PEL-531-1	BRAKE PAD 1/2-5T 115/230V FA0.5S	1
532	PEL-R-3	SNAP RING	1
534	PEL-534-1	SQUARE HUB	1
535	PEL-535-1	BRAKE HOLDER	1
540	PEL-540-2	BRAKE SPRING 107262 HOIST USE PEL-540-1	4
543	PEL-543-1	BRAKE COVER	1
544	PEL-544-2	BRAKE STAY BOLT	4
551	PEL-551-1	MOTOR BRACKET	1
552	PEL-552-1	MOTOR STAY BOLT	4
562	PEL-562-7	BRAKE COIL FA-1/2S 575V	1
562	PEL-562-10	BRAKE COIL 230/460V FA 1/2S	1
562	PEL-562-5	BRAKE COIL 115/230V FA1-1/2~5S	1
564A	PEL-564A-1	ARMATURE “A”	1
658B	PEL-658B-2	TERMINAL BOARD “B”	1
660	PEL-660-4	RECTIFIER 575V FA E/H	1
660	PEL-660-3	RECTIFIER 115/230/460V FA E/H	1
800		LOAD CHAIN (SEE CHAIN CHART)	1
815A	PEL-815-1	COIL SPRING “A”	1
815B	PEL-815-2	COIL SPRING “B”	2
817	PEL-817-2	CHAIN GAUGE	1
843	PEL-843-1	CHAIN CONTAINER SUPPORT METAL	1
844	PEL-844-1	CHAIN CONTAINER HANGER	1
940	PEL-940-*	NAME PLATE (SEE NAME PLATE CHART)	1
942	PEL-942-6	TYPE NAMEPLATE	1

FA1-0.5S,FA-0.5S ELECTRIC HOIST PRODUCT 107202,107212,107262

REF	PART	DESCRIPTION	REQ
947	PEL-947-1	DIAGRAM SEAL	1
948A	PEL-948A-1	SEAL “A” (*QTY PER HOIST)	4
949	PEL-949-1	WARNING SEAL	1
953	PEL-953-2	WARNING SEAL	1
958	PEL-958-1	TERMINAL NO. SEAL 7 THRU 12	1
1045	PEL-P-2	COTTER PIN	2
2032	PEL-N-4	NUT	8
2033	PEL-W-3	SPRING WASHER	8
2331	PEL-H-8	BOLT	2
2361	PEL-S-14	BOLT WITH SPRING WASHER	6
2481	PEL-C-10	SCREW WITH SPRING WASHER	2
3611	PEL-S-1	BOLT WITH SPRING WASHER	4
3641	PEL-S-1	BOLT WITH SPRING WASHER	4
4051	PEL-H-5	BOLT WITH HEX HOLE	4
4053	PEL-W-3	SPRING WASHER	4
4121	PEL-H-4	BOLT WITH HEX HOLE	2
4123	PEL-W-2	SPRING WASHER	2
4201	PEL-H-3	BOLT WITH HEX HOLE	2
4203	PEL-W-1	SPRING WASHER	2
5351	PEL-H-4	BOLT WITH HEX HOLE	4
5353	PEL-W-2	SPRING WASHER	4
5442	PEL-N-4	NUT	4
5443	PEL-W-3	SPRING WASHER	4
5522	PEL-N-2	CAP NUT	4
5523	PEL-W-1	SPRING WASHER	4
5921A	PEL-S-1	BOLT WITH SPRING WASHER	2
6551	PEL-S-1	BOLT WITH SPRING WASHER	3
6581B	PEL-C-9	SCREW WITH PLAIN AND SPRING WASHER	2
6601	PEL-C-11	SCREW WITH SPRING WASHER	1
6701	PEL-S-15	BOLT WITH PLAIN AND SPRING WASHER	2
7781	PEL-C-14	SCREW M6X40 FA-0.5S ONLY	2
7784	PEL-7784-1	COLLAR FA 1/2S 3PH ONLY FA-0.5S ONLY	2
956	PEL-956-1	VOLTAGE SEAL FA-0.5S ONLY	1
778	PEL-778-1	CONNECTOR PANEL FA 3PH. ONLY FA-0.5S ONLY	1

FA-1S FA-2S FA-3S FA-5S ELECTRIC HOIST PRODUCT 107263,107264,107265,107266,107213,107214,107215,107216

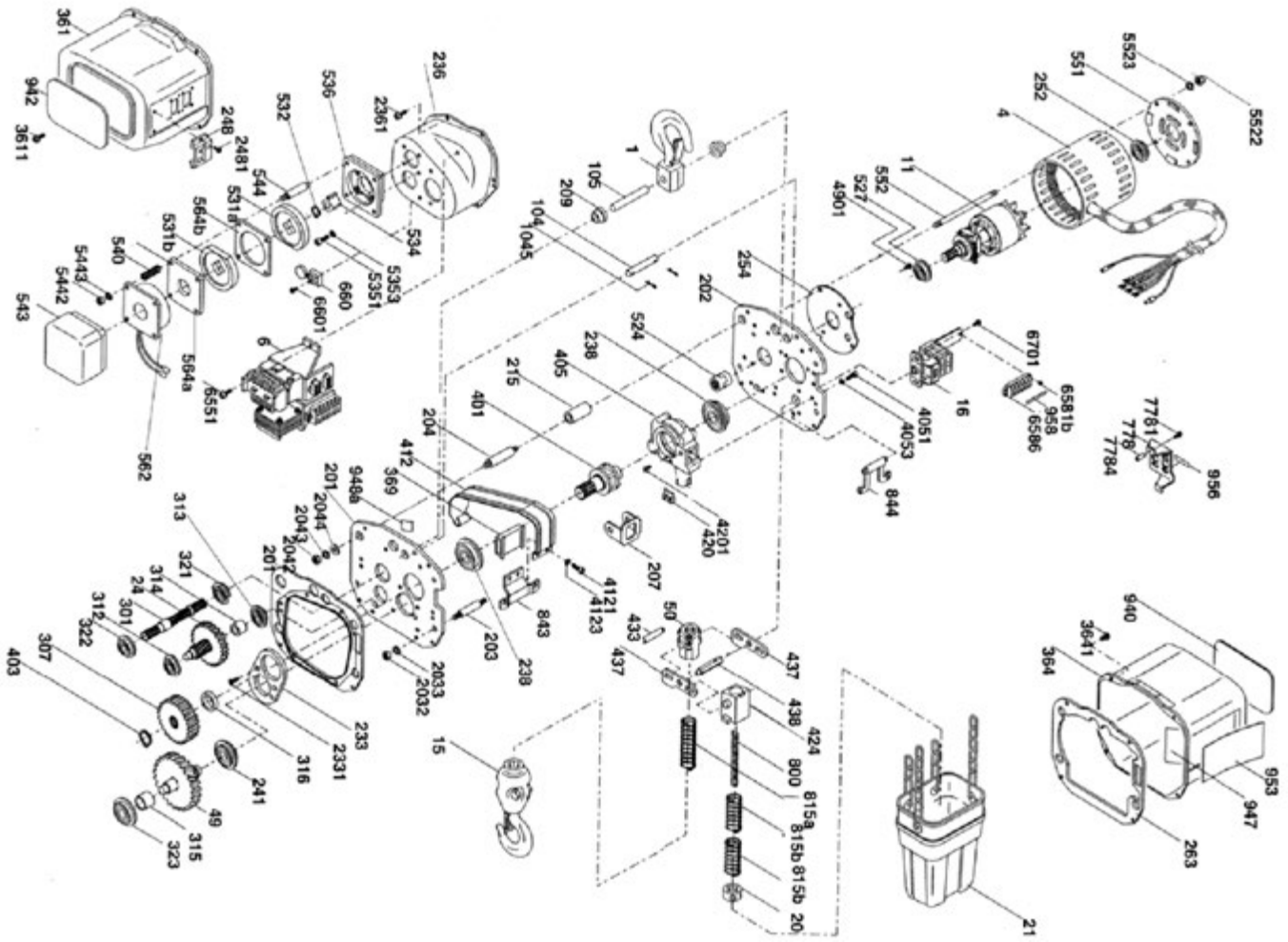

REF	PART	DESCRIPTION	REQ
1		TOP HOOK ASSY *(SEE HOOK CHART)	
4	PEL-04-10	MOTOR CASE ASSY 575V FA-1~5S	1
4	PEL-04-10R	MOTOR CASE ASSY 575V FA-1~5S EXCHANGE	
4	PEL-04-4	MOTOR CASE ASSY 230/460 V FA-1-5S	
4	PEL-04-4R	MOTOR CASE ASSY 230/460 V FA-1-5S EXCHANGE	
6		SEE ELECTRIC EQUIPMENT ASSY	1
11	PEL-11-4	ROTOR ASSY	1
15		BOTTOM HOOK ASSY *(SEE HOOK CHART)	1
16	PEL-16-3	LIMIT SWITCH 575V FA-1~5S	1
16	PEL-16-2	LIMIT SWITCH 230/460V FA	
20	PEL-20-2	CHAIN STOPPER ASSY *(2-TON QTY 2)	1
21	PEL21-1	CHAIN BUCKET # 1	1
21	PEL-21-2	CHAIN BUCKET # 2	1
21	PEL-21-3	CHAIN BUCKET # 3	1
21	PEL-21-4	CHAIN BUCKET # 4	1

FA-1S FA-2S FA-3S FA-5S ELECTRIC HOIST PRODUCT 107263,107264,107265,107266,107213,107214,107215,107216

REF	PART	DESCRIPTION	REQ
21	PEL-21-5	CHAIN BUCKET # 5	1
24	PEL-24-2	SECOND AND THIRD GEAR SET	1
49	PEL-49-2	FOURTH AND FIFTH GEAR SET	1
50	PEL-50-2	OPERATING ELEMENT “A” ASSEMBLY	1
104	PEL-104-1	TOP HOOK STOPPER PIN (1 TON ONLY)	1
105	PEL-105-2	1-TON TOP HOOK PIN	1
105	PEL-105-3	2-TON TOP HOOK PIN	1
105	PEL-105-4	3 & 5 TON TOP HOOK PIN	1
133	PEL-133-1	CHAIN ANCHOR PIN (2,3,& 5 TON ONLY)	1
134	PEL-134-1	CHAIN ANCHOR PIN PLATE (2,3,& 5 TON ONLY)	1
135	PEL-135-1	CHAIN ROLLER (3 & 5 TON ONLY)	1
201	PEL-201-2	GEAR SIDE PLATE	1
202	PEL-202-3	MOTOR SIDE PLATE	1
203	PEL-203-2	STAY BOLT “A”	3
204	PEL-204-1	STAY BOLT “B”	1
207	PEL-207-1	METAL HANGER	1
209	PEL-209-2	1-TON TOP HOOK REINFORCEMENT	2
209	PEL-209-3	2-TON TOP HOOK REINFORCEMENT	2
215	PEL-215-1	STAY PIPE (1 & 2 TON ONLY)	1
233	PEL-233-2	FLANGE “B”	1
236	PEL-236-2	GEAR CASE	1
238	PEL-B-2	BALL BEARING “2” *(QTY PER HOIST)	1
241	PEL-B-6	BALL BEARING “3”	1
248	PEL-248-1	PUSHBUTTON HANGER	1
252	PEL-B-4	BALL BEARING “7”	1
253	PEL-253-2	MOTOR CASE PACKING	1
254	PEL-254-2	LOCATION PLATE	1
301	PEL-301-2	FIRST GEAR SHAFT	1
307	PEL-307-2	SIXTH GEAR	1
312	PEL-B-5	BALL BEARING “10”	1
313	PEL-B-5	BALL BEARING “10”	1
314	PEL-314-2	THIRD GEAR COLLAR	1
315	PEL-315-2	FIFTH GEAR COLLAR	1
316	PEL-316-2	LIFT WHEEL COLLAR	1
321	PEL-B-4	BALL BEARING “4”	1
322	PEL-B-4	BALL BEARING “4”	1
323	PEL-B-6	BALL BEARING “5”	1
324	PEL-324-2	GEAR CASE PACKING	1
361	PEL-361-2	GEAR SIDE COVER	1
364	PEL-364-2	MOTOR SIDE COVER	1
369	PEL-369-1	LEAD WIRE RUBBER PROTECTOR	1
401	PEL-401-2	LIFTWHEEL	1
403	PEL-R-2	SNAP RING	1
405	PEL-405-2	CHAIN GUIDE	1
	PEL-408-1	ROLLER PIN OLDSTYLE	1
	PEL-409-1	ROLLER OLD STYLE	1
412	PEL-412-2	1 & 2 TON SHEAVE COVER	1
412	PEL-412-3	3 & 5 TON SHEAVE COVER	1

FA-1S FA-2S FA-3S FA-5S ELECTRIC HOIST PRODUCT 107263,107264,107265,107266,107213,107214,107215,107216

REF	PART	DESCRIPTION	REQ
420	PEL-420-1	STRIPPER	1
424	PEL-424-2	OPERATING ELEMENT “B”	1
433	PEL-433-1	OPERATING ELEMENT “A” STOPPER	1
437	PEL-437-2	OPERATING PLATE	2
524	PEL-524-1	MOTOR SHAFT JOINT	1
527	PEL-B-4	BALL BEARING “6”	1
531	PEL-531-3	FRICTION PAD	2
531	PEL-531-4	FRICTION PAD	2
532	PEL-R-3	SNAP RING	1
534	PEL-534-1	SQUARE HUB	1
535	PEL-535-1	BRAKE HOLDER	1
540		BRAKE SPRING 575V USE PEL-540-1 230/460 V USE PEL-540-2	4
543	PEL-543-1	BRAKE COVER	1
544	PEL-544-3	BRAKE STAY BOLT	4
551	PEL-551-2	MOTOR BRACKET	1
552	PEL-552-2	MOTOR STAY BOLT	4
562	PEL-562-11	BRAKE COIL 230/460V FA 1~5S	1
562	PEL-562-8	BRAKE COIL FA-1~5S 575V	1
604	PEL-604-1	CHAIN BOLT (2 TON ONLY)	1
660	PEL-660-3	RECTIFIER 115/230/460V FA E/H	1
660	PEL-660-4	RECTIFIER 575V FA E/H	1
778	PEL-778-1	CONNECTOR PANEL	1
800		LOAD CHAIN *(SEE CHAIN CHART)	
813	PEL-813-1	COIL SPRING PLATE (5 TON ONLY)	1
817	PEL-817-3	CHAIN GAUGE	1
818	PEL-818-1	CHAIN ANCHOR (2 TON ONLY)	1
843	PEL-843-1	CHAIN CONTAINER SUPPORT METAL	1
844	PEL-844-1	CHAIN CONTAINER HANGER	1
940	PEL-940-*	NAMEPLATE *(SEE NAMEPLATE CHART)	1
942	PEL-942-7	1-TON TYPE NAMEPLATE	1
942	PEL-942-8	2-TON TYPE NAMEPLATE	1
942	PEL-942-9	3-TON TYPE NAMEPLATE	1
942	PEL-942-10	5-TON TYPE NAMEPLATE	1
947	PEL-947 -2	DIAGRAM SEAL	1
949	PEL-949-1	WARNING SEAL	1
953	PEL-953-2	WARNING SEAL	1
956	PEL-956-1	VOLTAGE SEAL	1
958	PEL-958-1	TERMINAL NO. SEAL 7 THRU 12	1
1045	PEL-P-2	COTTER PIN (1 TON ONLY)	2
1341	PEL-S-1	BOLT W/SPRING/WSHR (2,3,& 5 TON ONLY)	2
2032	PEL-N-5	NUT	2
2033	PEL-W-5	SPRING WASHER	2
2042	PEL-N-5	NUT	2
2043	PEL-W-5	SPRING WASHER	2
2044	PEL-2044-1	PLAIN WASHER	2
2331	PEL-H-8	BOLT	2
2361	PEL-S-14	BOLT WITH SPRING WASHER	2
2481	PEL-C-10	SCREW WITH SPRING WASHER	2

FA-1S FA-2S FA-3S FA-5S ELECTRIC HOIST PRODUCT 107263,107264,107265,107266,107213,107214,107215,107216

REF	PART	DESCRIPTION	REQ
3611	PEL-S-1	BOLT WITH SPRING WASHER	2
3641	PEL-S-1	BOLT WITH SPRING WASHER	4
4051	PEL-H-5	BOLT WITH HEX HOLE	4
4053	PEL-W-3	SPRING WASHER	4
4121	PEL-H-4	BOLT WITH HEX HOLE	2
4123	PEL-W-2	SPRING WASHER	2
4201	PEL-H-3	BOLT WITH HEX HOLE	2
4203	PEL-W-1	SPRING WASHER	4
5351	PEL-H-4	BOLT WITH HEX HOLE	4
5353	PEL-W-2	SPRING WASHER	4
5442	PEL-N-4	NUT	4
5443	PEL-W-3	SPRING WASHER	4
5522	PEL-N-3	CAP NUT	4
5523	PEL-W-2	SPRING WASHER	4
6042	PEL-N-8	NUT (2 TON ONLY)	1
6045	PEL-P-9	COTTER PIN (2 TON ONLY)	1
6551	PEL-S-1	BOLT WITH SPRING WASHER	3
6601	PEL-C-11	SCREW WITH SPRING WASHER	2
6701	PEL-S-15	BOLT WITH PLAIN AND SPRING WASHER	2
8444	PEL-W-9	PLAIN WASHER	2
8445	PEL-P-8	COTTER PIN	2
564A	PEL-564A-1	ARMATURE “A”	1
564B	PEL-564B-1	ARMATURE “B”	1
5921A	PEL-S-1	BOLT WITH SPRING WASHER	2
6581B	PEL-C-9	SCREW WITH PLAIN AND SPRING WASHER	2
658B	PEL-658B-2	TERMINAL BOARD “B”	1
815A	PEL-815-1	COIL SPRING “A” (1 TON ONLY)	1
815A	PEL-815-3	COIL SPRING “A” (2,3,& 5 TON ONLY)	1
815B	PEL-815-2	COIL SPRING “B”	2
815C	PEL-815-4	COIL SPRING “C” (3 & 5 TON ONLY)	2
948A	PEL-948A-1	SEAL “A” *(1-TON QTY 4)	2

ELECTRIC HOIST TOP HOOK 1/2 1 2 3 TON

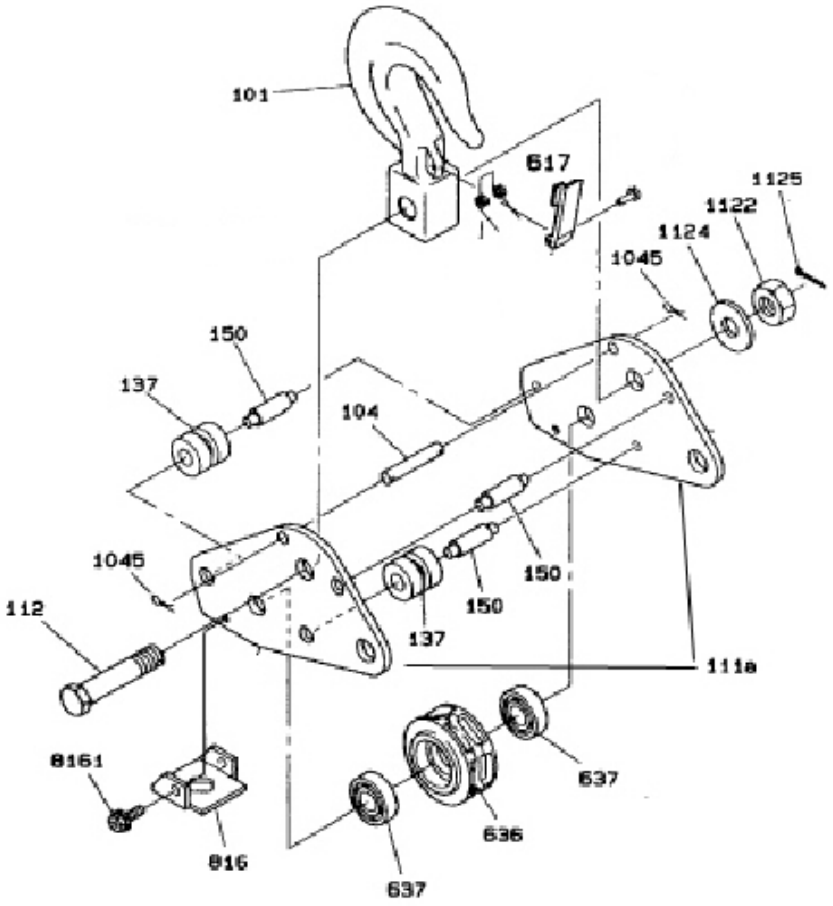

REF	PART	DESCRIPTION	REQ	REF	PART	DESCRIPTION	REQ
101	PEL-01-1	1/2 TON TOP HOOK ASS		1	617	PEL90-016BC	LATCH
KIT 3 TON		1					
101	PEL-01-2	1-TON TOP HOOK ASS	1	617	PEL90-016FA	LATCH KIT 5 TON	1
101	PEL-01-3	2-TON TOP HOOK ASS	1	636	PEL-636-2	SHEAVE	1
101	PEL-01-4	3-TON TOP HOOK ASS	1	637	PEL-B-8	BEARING	2
104	PEL-104-2	TOP HOOK STOPPER	1	816	PEL-816-1	COIL SPRING PLATE	1
112	PEL-112-1	CONNECTING BOLT	1	1045	PEL-P-2	COTTER PIN	2
137	PEL-137-1	ROLLER	2	1122	PEL-N-6	NUT	1
150	PEL-150-1	HOOK STAY	3	1124	PEL-W-8	PLAIN WASHER	1
615	PEL-GA3	LATCH KIT 2 TON	1	1125	PEL-P-3	COTTER PIN	1
617	PEL90-016AA	LATCH KIT 1/2 TON	1	8161	PEL-S-14	BOLT W SPRING WASHER	2

ELECTRIC HOIST TOP HOOK 5 TON

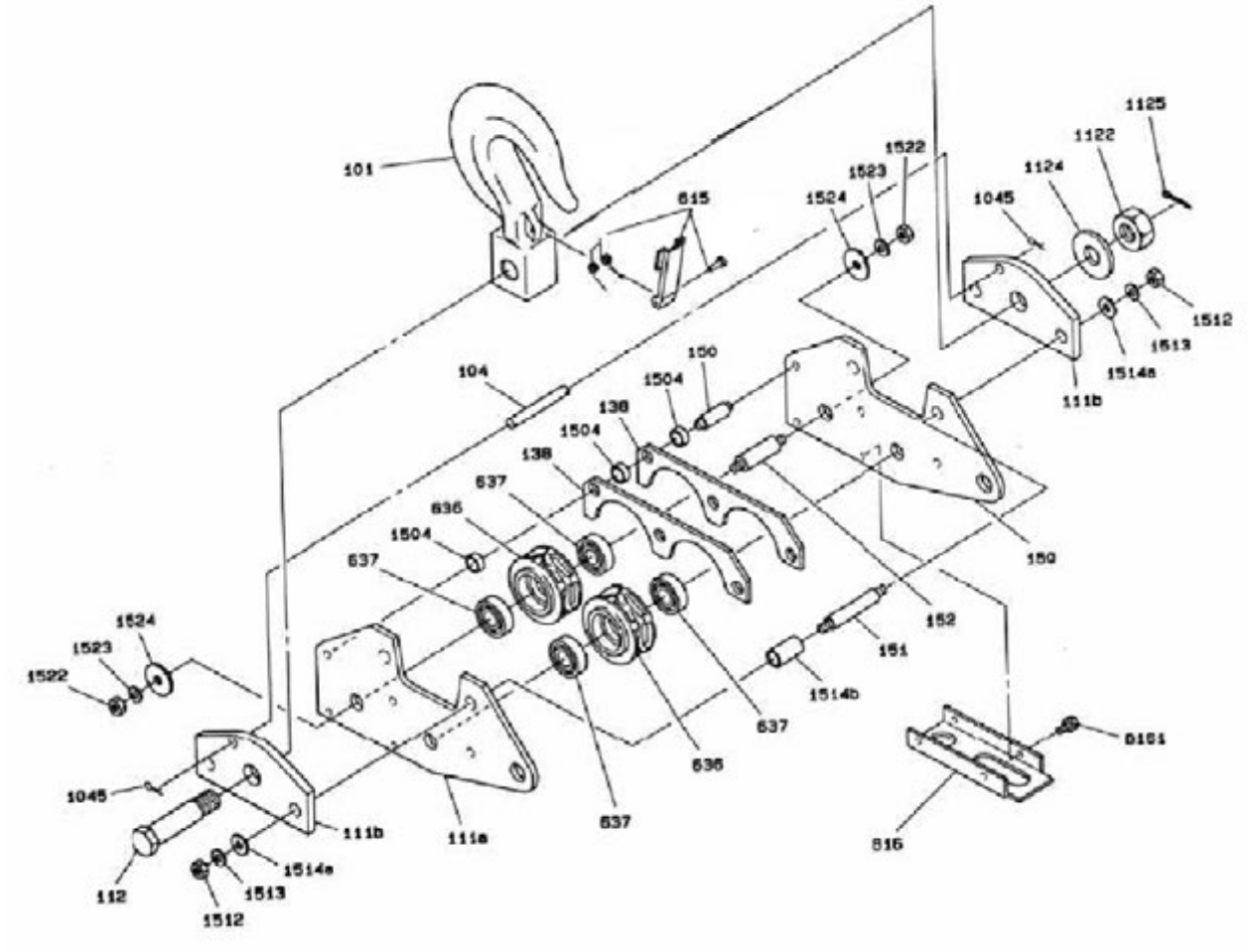

REF	PART	DESCRIPTION	REQ	REF	PART	DESCRIPTION	REQ
101	PEL-01-5	5 TON RATING TOP HOOK ASSEMBLY	1	1045	PEL-P-2	COTTER PIN	2
104	PEL-104-3	TOP HOOK STOPPER	1	1122	PEL-N-17	NUT	1
111A	PEL-111A-2	TOP HOOK REINFORCEMENT “A”	2	1124	PEL-W-15	PLAIN WASHER	1
111B	PEL-111B-2	TOP HOOK REINFORCEMENT “B”	2	1125	PEL-P-19	COTTER PIN	1
112	PEL-112-2	CONNECTING BOLT	1	1504	PEL-1504-1	COLLAR	9
138	PEL-138-1	CHAIN GUIDE	2	1512	PEL-N-5	NUT	4
150	PEL-150-2	HOOK STAY	2	1513	PEL-W-5	SPRING WASHER	4
151	PEL-151-1	HOOK STAY BOLT	2	1514A	PEL-W-16	PLAIN WASHER	4
152	PEL-152-1	SHEAVE SHAFT	1	1514B	PEL-1514B-1	COLLAR	2
615	PEL-GA5	LATCH KIT	1	1522	PEL-N-5	NUT	2
636	PEL-636-2	SHEAVE	2	1523	PEL-W-5	SPRING WASHER	2
637	PEL-B-8	BEARING	4	1524	PEL-1524-1	PLAIN WASHER	2
816	PEL-816-2	COIL SPRING PLATE	1	8161	PEL-S-14	BOLT WITH SPRING WASHER	4

ELECTRIC HOIST BOTTOM HOOK 1/2 1 TON

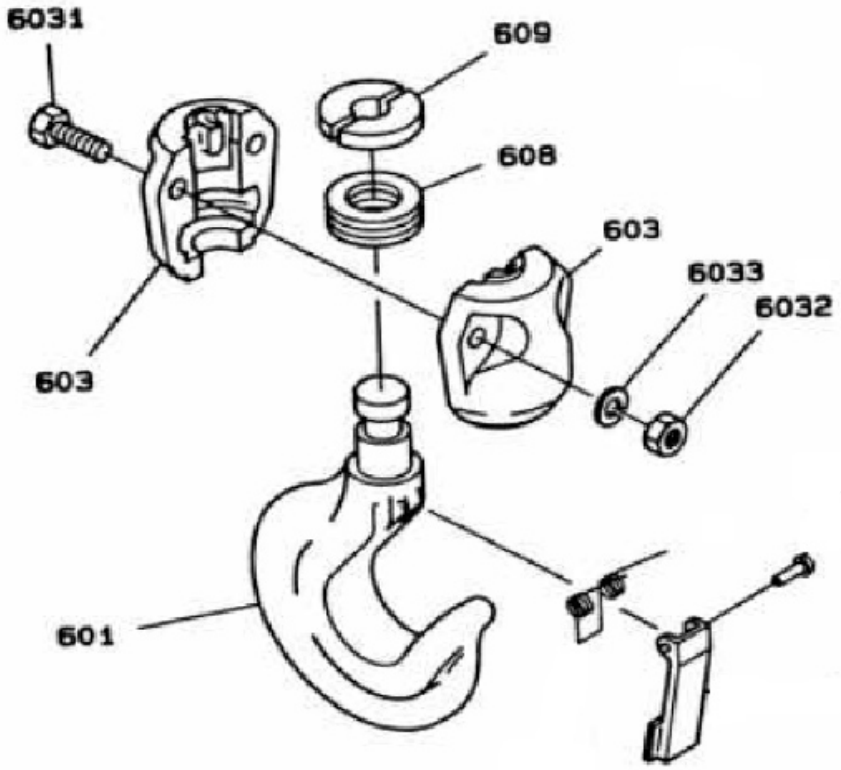

REF	PART	DESCRIPTION	REQ
	PEL-15-1	1/2-TON BTM HOOK ASS	1
601	PEL-601-1	1/2-TON BTM HOOK W/LATCH	1
603	PEL-GC-1	HOOK BLOCK ASSEMBLY	1
608	PEL-B-9	THRUST BEARING	1
609	PEL-609-1	HOOK HOLDER	2
	PEL-615-1	LATCH KIT 1/2 TON RIVET TYPE	1
	PEL90-016AA	LATCH KIT 1/2 TON	1
6031	PEL-S-2	BOLT	2
6032	PEL-N-9	NUT	2
6033	PEL-W-10	SPRING WASHER	2

REF	PART	DESCRIPTION	REQ
	PEL-15-2	1-TON BTM HOOK ASSY	1
601	PEL-601-2	1-TON BTM HOOK W/LATCH	1
603	PEL-GC-2	HOOK BLOCK ASSEMBLY	1
608	PEL-B-10	THRUST BEARING	1
609	PEL-609-2	HOOK HOLDER	2
	PEL90-016BA	LATCH KIT 1 TON	1
6031	PEL-S-3	BOLT	2
6032	PEL-N-10	NUT	2
6033	PEL-W-11	SPRING WASHER	2

ELECTRIC HOIST BOTTOM HOOK 2 TON

NEW STYLE
SWIVEL TYPE

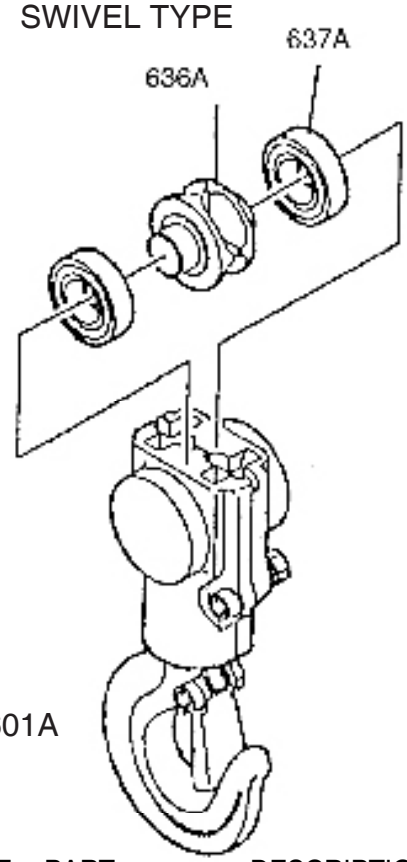

OLD STYLE
CASTLE NUT TYPE

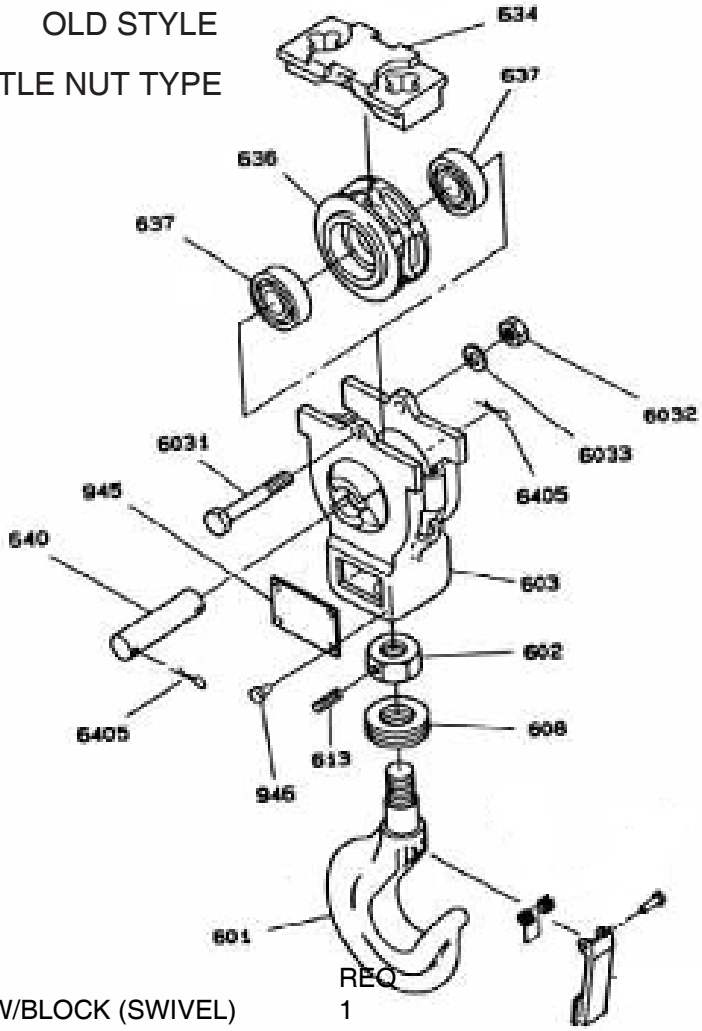

REF	PART	DESCRIPTION	REQ
	PEL-15-3A	2-TON BTM HOOK ASSY W/BLOCK (SWIVEL)	1
601	PEL-601-3	2-TON BTM HOOK W/LATCH(CASTLE NUT TYPE)	1
601A	PEL-601-3A	2-TON BTM HOOK W/LATCH (SWIVET TYPE)	1
602	PEL-602-1	HOOK NUT	1
603	PEL-603-3	HOOK BLOCK	1
608	PEL-B-11	THRUST BEARING	1
613	PEL-P-6	HOOK PIN	1
615	PEL-GA3	LATCH KIT	1
634	PEL-634-1	BTM HOOK COVER	1
636	PEL-636-2	SHEAVE	1
636A	PEL-636-2A	SHEAVE SWIVEL	1
637	PEL-B-8	BEARING CASTLE	2
637A	PEL-B-23	BEARING SWIVEL	2
640	PEL-640-1	SHEAVE SHAFT	1
945	PEL-945-1	RATED LOAD PLATE	1
946	PEL-P-10	RIVET	4
6031	PEL-S-4	BOLT	1
6032	PEL-N-11	NUT	1
6033	PEL-W-3	SPRING WASHER	1
6405	PEL-P-3	COTTER PIN	2

ELECTRIC HOIST BOTTOM HOOK 3 TON

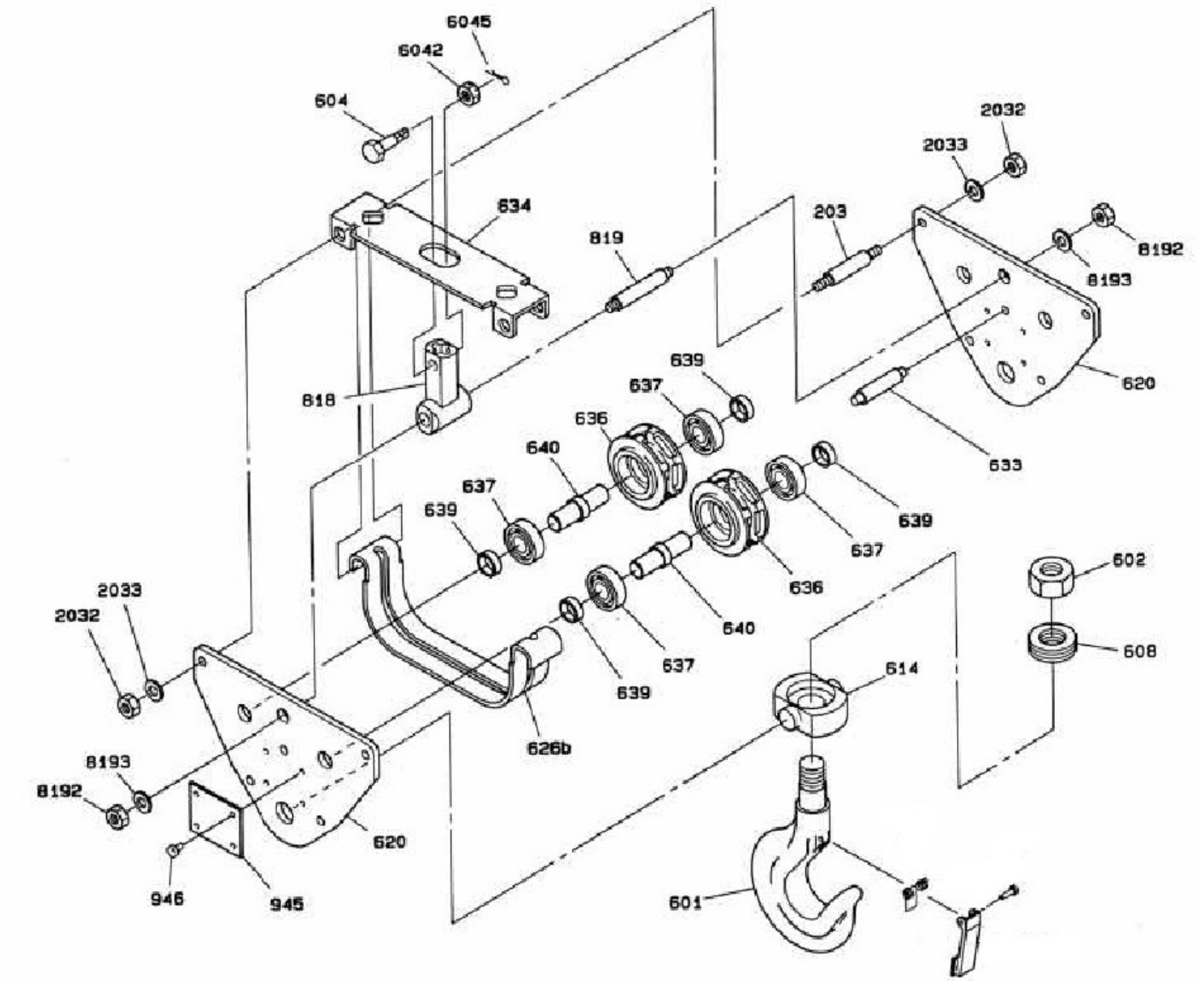

REF	PART	DESCRIPTION	REQ	REF	PART	DESCRIPTION	REQ
601	PEL-601-4	3-TON BTM HOOK W/LATCH	1	637	PEL-B-8	BEARING	4
	PEL-15-4	3-TON BTM HOOK ASS	1	639	PEL-639-1	COLLAR	4
203	PEL-203-2	STAY BOLT “A”	4	640	PEL-640-2	SHEAVE COLLAR	2
602	PEL-N-7	HOOK NUT	1	818	PEL-818-1	CN ANCHOR REINFORCEMENT	1
604	PEL-604-1	CHAIN BOLT	1	819	PEL-819-1	CHAIN REINFORCEMENT PIN	1
608	PEL-B-12	THRUST BEARING	1	945	PEL-945-5	RATED LOAD PLATE	2
614	PEL-614-1	HOOK BRACKET	1	946	PEL-P-10	RIVET	8
	PEL90-016FA	LATCH KIT 5 TON	1	2032	PEL-N-5	NUT	8
620	PEL-620-1	HOOK SIDE PLATE	2	2033	PEL-W-5	SPRING WASHER	8
626B	PEL-626B-1	CHAIN GUIDE	1	6042	PEL-N-8	NUT	1
633	PEL-633-1	HOOK STAY	1	6045	PEL-P-9	COTTER PIN	1
634	PEL-634-2	BTM HOOK COVER	1	8192	PEL-N-5	NUT	2
636	PEL-636-2	SHEAVE	2	8193	PEL-W-5	SPRING WASHER	2

ELECTRIC HOIST BOTTOM HOOK 5 TON

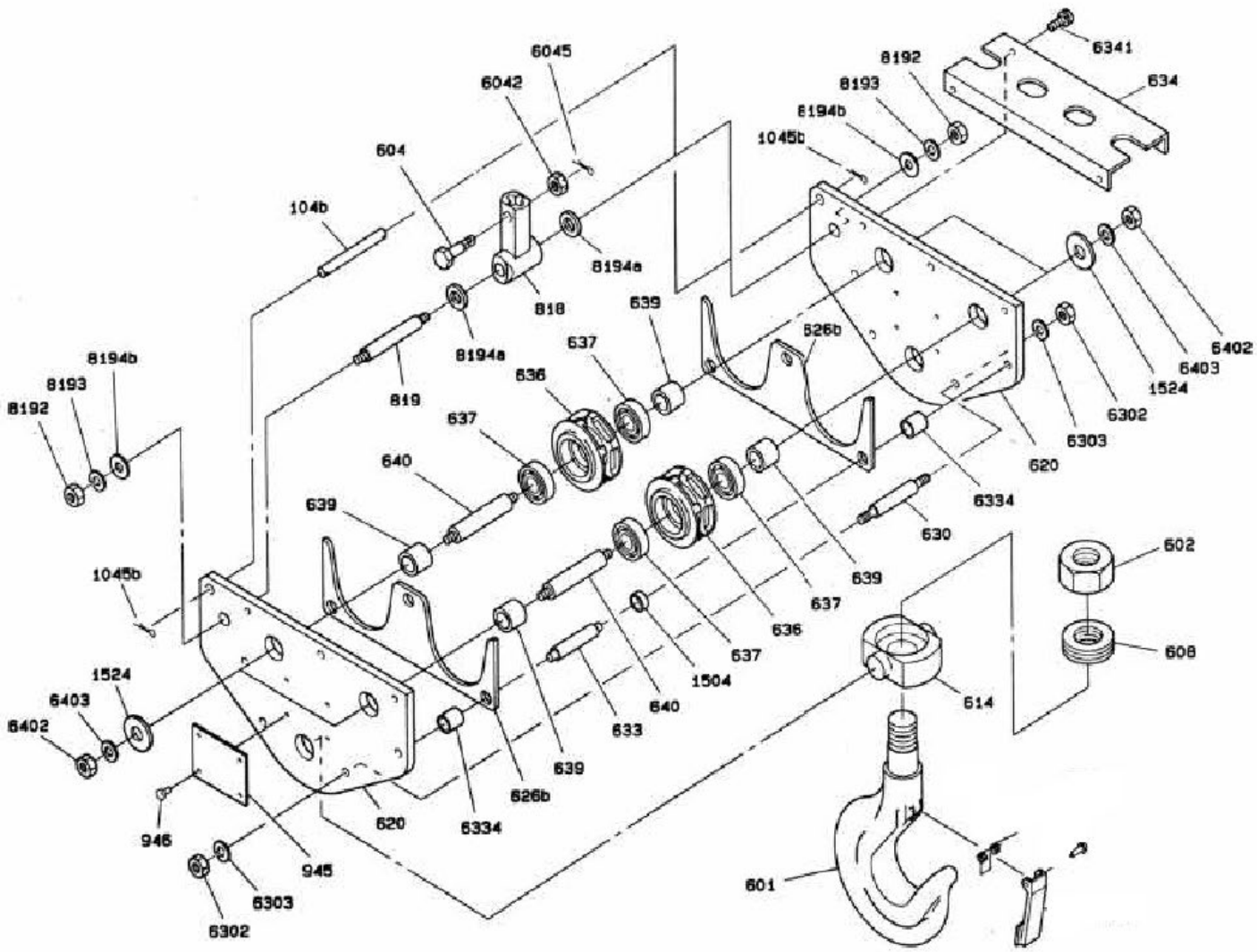

REF	PART	DESCRIPTION	REQ	REF	PART	DESCRIPTION	REQ
601	PEL-601-7	5-TON BTM HOOK W/LATCH	1	819	PEL-819-2	CHAIN REINFORCEMENT PIN	1
	PEL-15-5	5-TON BTM HOOK ASS	1	945	PEL-945-6	RATED LOAD PLATE	2
104B	PEL-104B-1	CHAIN ANCHOR METAL STOPPER	1	946	PEL-P-10	RIVET	8
602	PEL-N-18	HOOK NUT	1	1045B	PEL-P-2	COTTER PIN	2
604	PEL-604-1	CHAIN BOLT	1	1504	PEL-1504-1	COLLAR	3
608	PEL-B-25	THRUST BEARING	1	1524	PEL-1524-1	PLAIN WASHER	4
615	PEL-GA5	LATCH KIT	1	6042	PEL-N-8	NUT	1
614	PEL-614-2	HOOK BRACKET	1	6045	PEL-P-9	COTTER PIN	1
620	PEL-620-2	HOOK SIDE PLATE	2	6302	PEL-N-5	NUT	4
626B	PEL-626B-2	CHAIN GUIDE	2	6303	PEL-W-5	SPRING WASHER	4
630	PEL-630-1	HOOK STAY BOLT	2	6334	PEL-6334-1	COLLAR	6
633	PEL-633-2	HOOK STAY	3	6341	PEL-S-14	BOLT WITH SPRING WASHER	4
634	PEL-634-4	BOTTOM HOOK COVER	1	6402	PEL-N-5	NUT	4
636	PEL-636-2	SHEAVE	2	6403	PEL-W-5	SPRING WASHER	4
637	PEL-B-8	BEARING	4	8192	PEL-N-5	NUT	2
639	PEL-639-2	COLLAR	4	8193	PEL-W-5	SPRING WASHER	2
640	PEL-640-4	SHEAVE COLLAR	2	8194A	PEL-8194A-1	COLLAR	2
818	PEL-818-1	C ANCHOR REINFORCEMENT	1	8194B	PEL-W-16	PLAIN WASHER	2
819	PEL-819-2	CHAIN REINFORCEMENT PIN	1				

FA1-1S FA1-0.5S FA1-2S FA1-3S FA1-5S ELECTRIC HOIST ELECTRICAL COMPONENTS

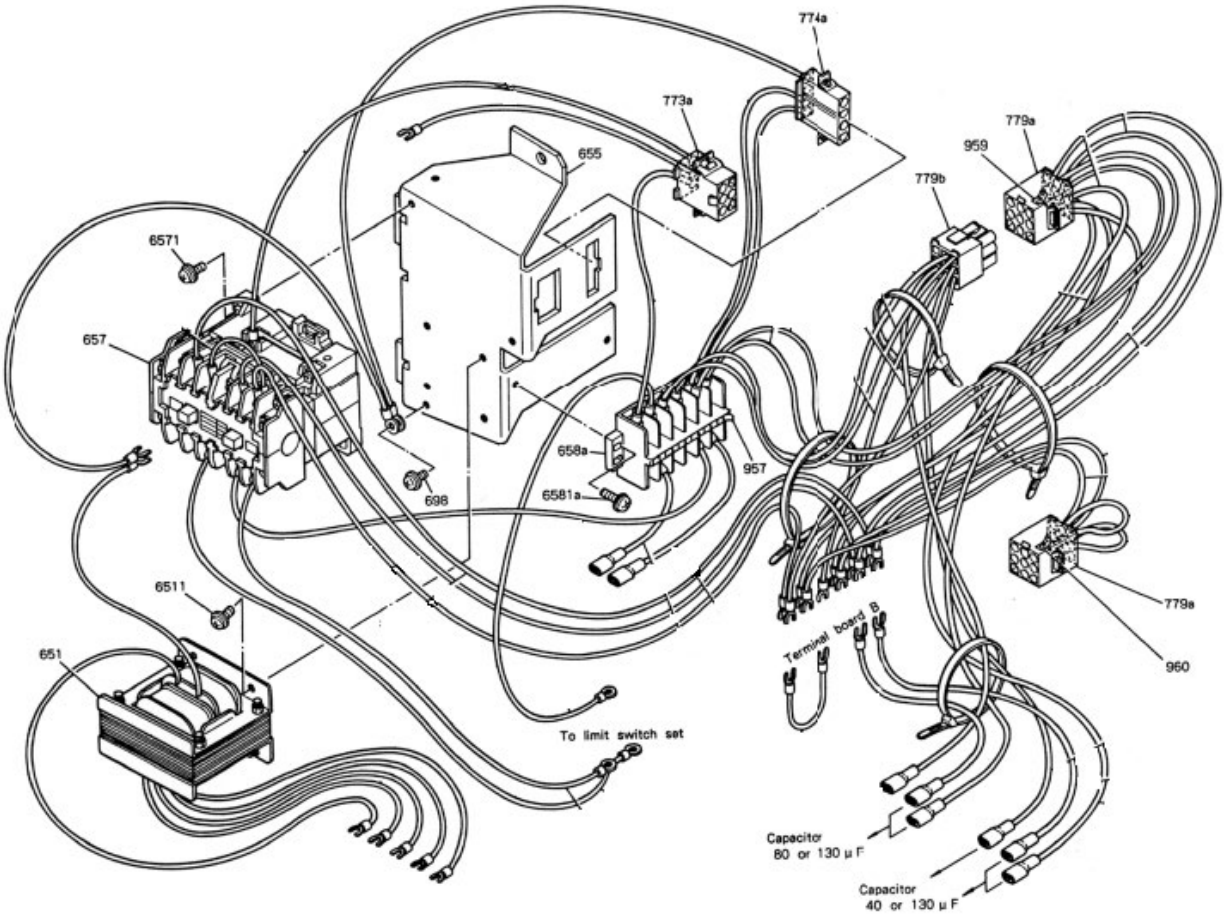

REF	PART NUMBER	DESCRIPTION	REQ
651	PEL-651-6	TRANSFORMER 115/230V FA1-1/2	1
655	PEL-655-1	BRACKET	1
657	PEL-657-1	MAG CONTACTOR(M1) SNGL PHASE	1
658A	PEL-658B-2	TERMINAL BOARD “B”	1
698	PEL-C-8	SCREW M4X8	1
773A	PEL-773A-1	6PIN FEMALE SOCKET FA	1
774A	PEL-774A-1	4PIN FEMALE SOCKET FA	1
779A	PEL-779A-1	9PIN FEMALE SOCKET FA	2
779B	PEL-779B-1	9PIN MALE SOCKET FA	1
957	PEL-957-1	TERMINAL SEAL NO 1 THRU 6	1
959	PEL-959-1	SOCKET SEAL (115V)	1
960	PEL-960-1	SOCKET SEAL (230V)	1
6511	PEL-C-8	SCREW M4X8	4
6571	PEL-C-4	SCREW M4X15	2
6581A	PEL-C-9	SCREW M4X10	2

FA-0.5S FA-1S FA-2S FA-3S FA-5S ELECTRIC HOIST ELECTRICAL COMPONENTS

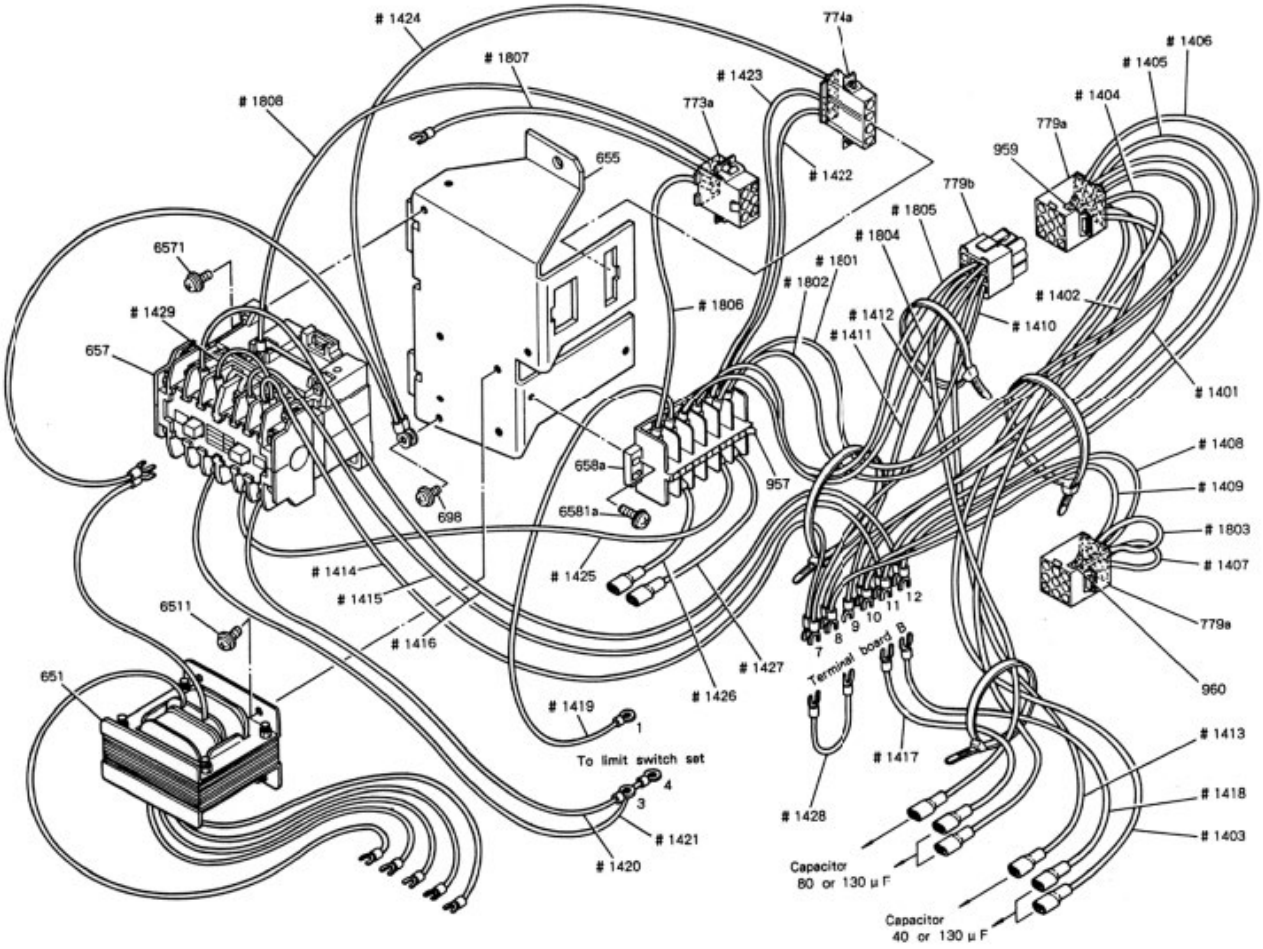

REF	PART NUMBER	DESCRIPTION	REQ	REF	PART NUMBER	DESCRIPTION	REQ
599	PEL-599-1	REV/PHASE/INSP 230/460V E/H	1	961	PEL-961-1	SOCKET SEAL	1
599	PEL-599-3	REV/PHASE/INSP 575V FA E/H	1	962	PEL-962-1	SOCKET SEAL	1
651	PEL-651-7	TRANSFORMER 230/460V FA-1/2~	1	963	PEL-963-1	SOCKET SEAL	1
651	PEL-651-8	TRANSFORMER 575V FA-1/2~5S	1	964	PEL-964-1	SOCKET SEAL	1
655	PEL-655-1	BRACKET	1	965	PEL-965-1	SOCKET SEAL	1
657	PEL-657-4	MAG CONTACTOR(M4) FA 3PH.	1	966	PEL-966-1	SOCKET SEAL	1
658A	PEL-658B-2	TERMINAL BOARD “B”	1	967	PEL-967-1	SOCKET SEAL	1
698	PEL-C-8	SCREW M4X8	1	5991	PEL-C-7	SCREW M3X8	1
773A	PEL-773A-1	6PIN FEMALE SOCKET FA	5	6511	PEL-C-8	SCREW M4X8	4
774A	PEL-774A-1	4PIN FEMALE SOCKET FA	5	6571	PEL-C-4	SCREW M4X15	2
957	PEL-957-1	TERMINAL SEAL NO 1 THRU 6	1	6581A	PEL-C-9	SCREW M4X10	2

FA ELECTRIC HOIST PUSH BUTTON AND POWER CABLE

REF	PART NUMBER	DESCRIPTION	REQ
19	PEL-19-1	PENDANT CONTROL (PBC2)	1
	PEL-19-3	PENDANT CONT. SET (PBC-4)	1
	PEL-PBCS-6	6 BUTN/P/CNTRL O/O,U/D,L/R	1
588	PEL-588-1	PACKING (PBC-2)	1
588	PEL-588-2	PACKING (PBC 4 & 6)	1
589	PEL-589-1	RESIN HOLDER (PBC-2)	1
589	PEL-589-3	RESIN HOLDER SET PBC4,6	1
590	PEL-590-1	CONNECTOR CASE PBC2	1
590	PEL-590-2	CONNECTOR CASE PBC4,6	1
701	105151	PENDANT CABLE 16/3	
	105152	PENDANT CABLE 16/7	
773B	PEL-773B-1	6PIN MALE SOCKET FA	1
774B	PEL-774B-1	4P MALE PLUG	1
776B	PEL-776B-1	15PIN MALE SOCKET FA	1
591	PEL-999-4	POWER CORD CABLE 14/3 SO	
591	PEL-999-5	POWER CORD CABLE 14/4 SO	
5901	PEL-C-10	SCREW M5X10 (H.D. MAC128588)	4
999	PEL-999-1	STRAIN RELIEF CABLE (FOOT)	
NS	PHA813024	FEMALE CONNECTOR (10 PACK)	
NS	PHA813023	MALE CONNECTOR (10 PACK)	

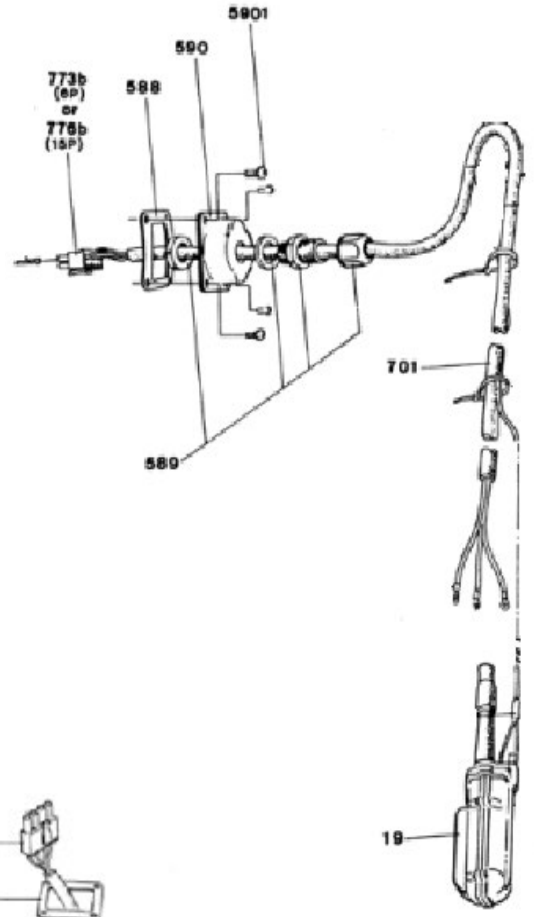

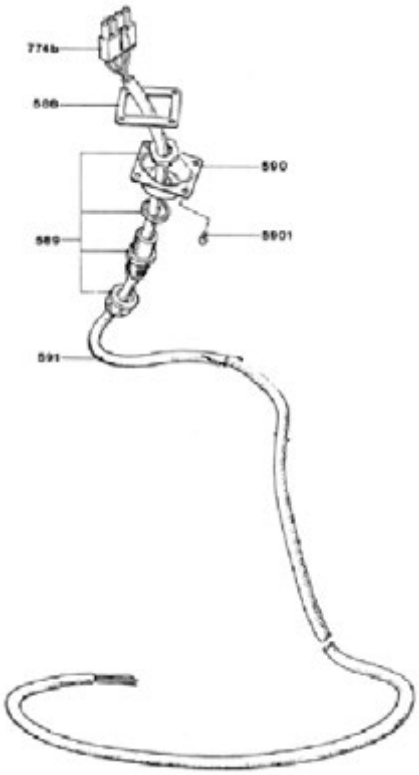

FA1-1S FA1-2S FA1-3S FA1-5S ELECTRIC HOIST CAPACITOR CHART OLD AND NEW

Modification of Capacitor and Capacitor holder A & Capacitor holder B for FA1 1ton – 5ton

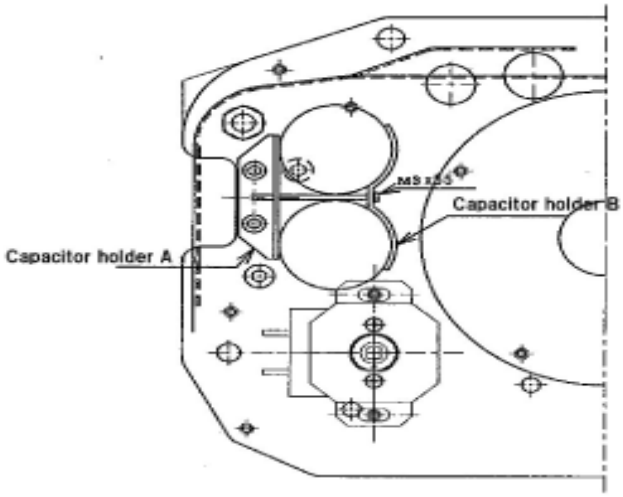

Old type

Capacitor : 130 μF

Capacitor holder A

Capacitor holder B

Screw : M3x55

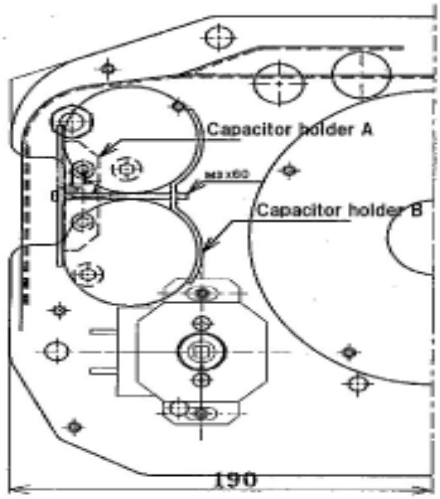

New type

Capacitor (New) : 130 μF

Capacitor holder A (New)

Capacitor holder B (New)

Screw : M3x 60