| Symbol | Date | Rev. by | Notice | Check |
|---|---|---|---|---|
| 1 x | | | | |
| 2 x | | | | |
| 3 x | | | | |
| 4 x | | | | |

NIKKEN KOSAKUSHO WORKS., LTD. ALL Rights Reserved

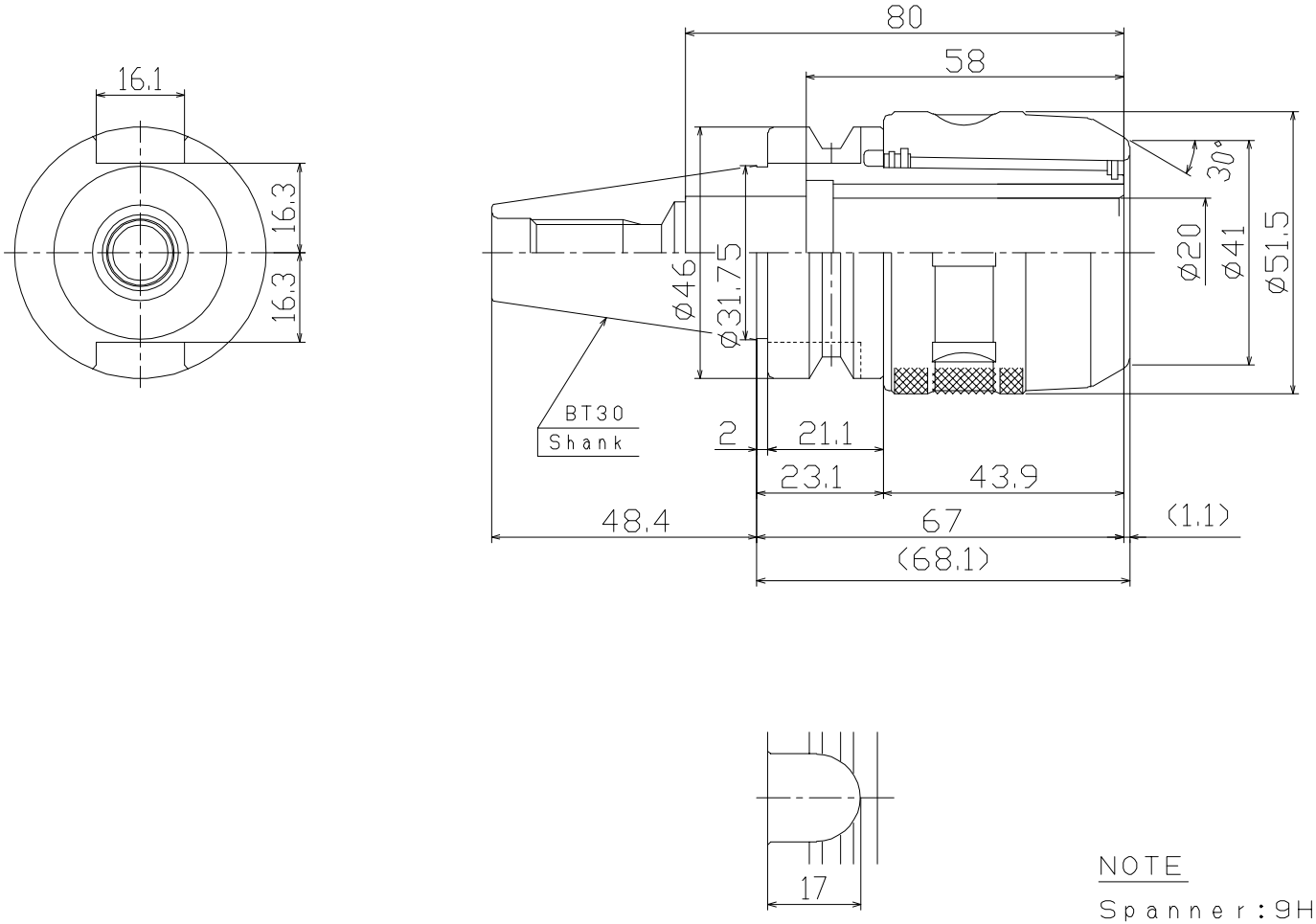


NOTE

Spanner:9HC22 (Option)

| KIND | TITLE | CUSTOMER | | |
|---|---|---|---|---|
| C20-2 | Milling Chuck | | | |
| MACHINE MODEL | CODE NO. | DESIGNED | CHECKED | APPROVED |
| | BT30-C20-65 | M.Shibata | | |
| SCALE 1:1 | NIKKEN KOSAKUSHO WORKS, LTD. | DIR-NAME | MCA1 | |
| DATE 2022.05.24 | | DRWG NO. | MCA25-06022/0 | |