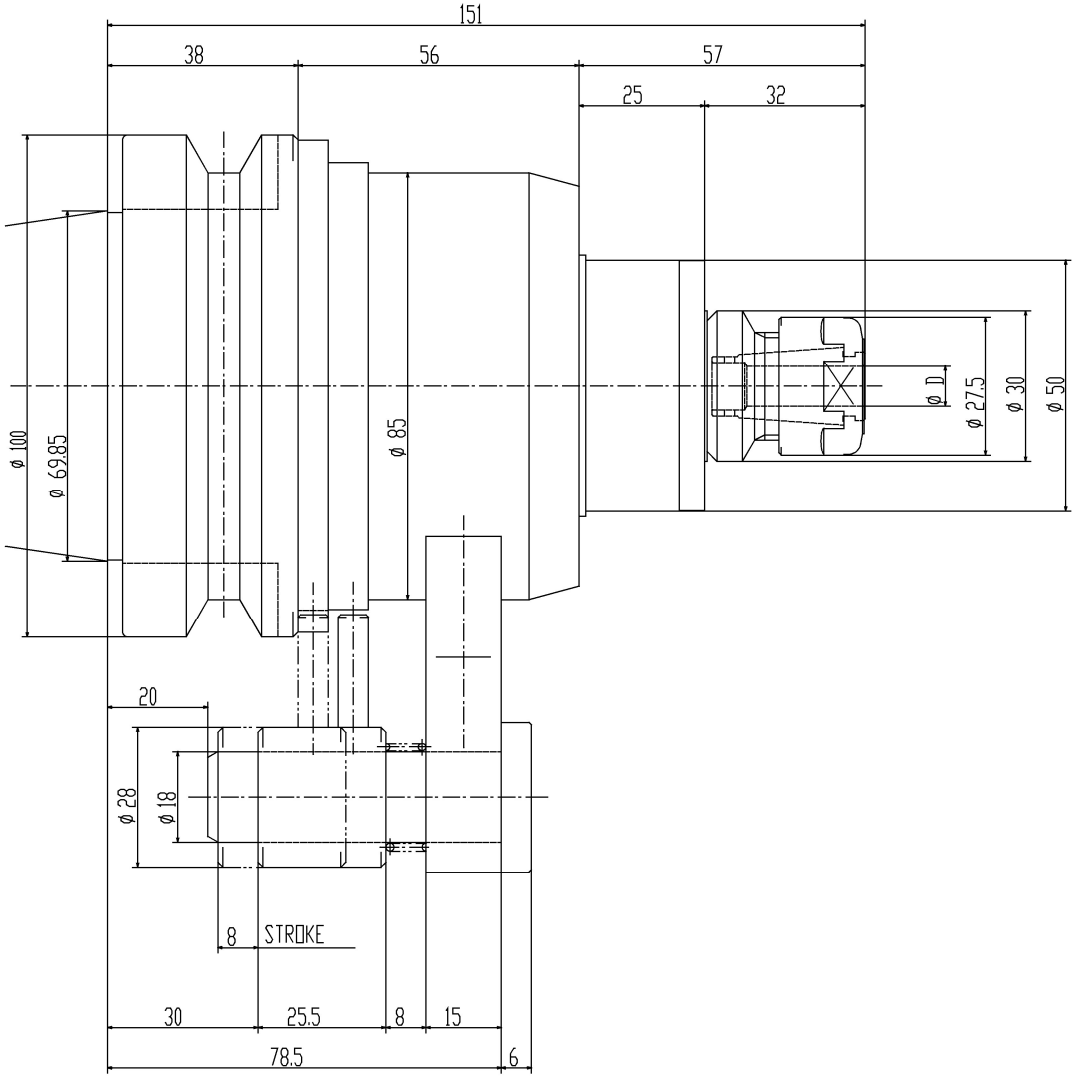

BT50 SHANK

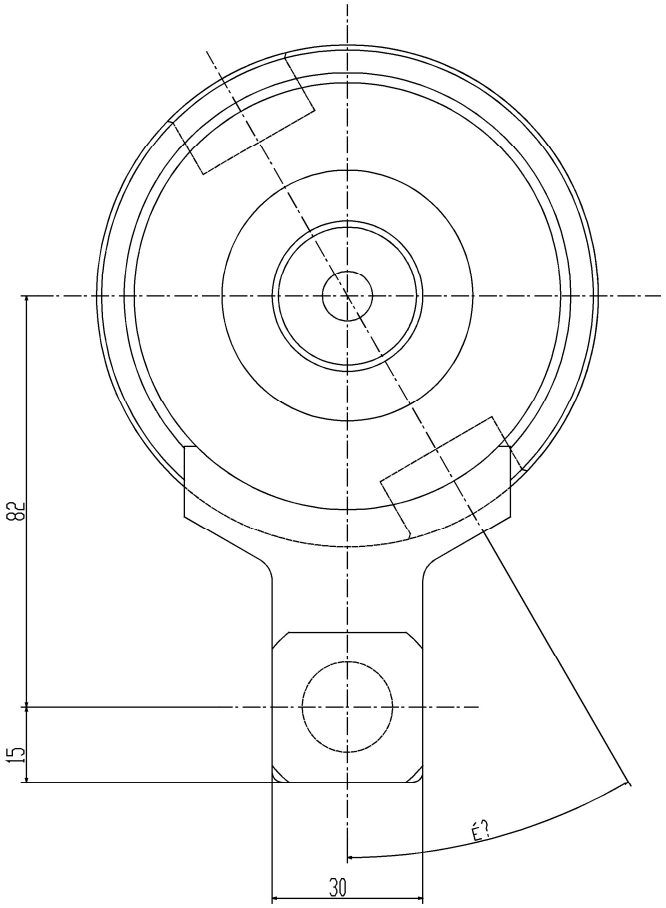

Symbol x Qty	Date	Revised	Notice
1 X			
2 X			
3 X			
4 X			

SPECIFICATIONS	
GEAR RATIO (Spindle : Cutter)	1 : 5
CUTTER SPEED	MAX 20,000 rpm
Angle 1	0° ~ 360° Adjustable
CHUCKING DIA. øD	ø1.75 ~ ø10.0
WEIGHT	Approx. 7.0 kg

KIND: STANDARD Pitch 82	TITLE: SPINDLE SPEEDER NX5	CUSTOMER	
MACHINE MODEL	CODE NO.: BT50-NX5-151	DESIGNED: Kiuchi	CHECKED: Nakai / APPROVED: Yamamoto
SCALE: 1/1		DIR-NAME	NXA1:Y
DATE: 1993/Nov/02	NIKKEN KOSAKUSHO WORKS, LTD.	DRWG NO.	NX021-01001U/0