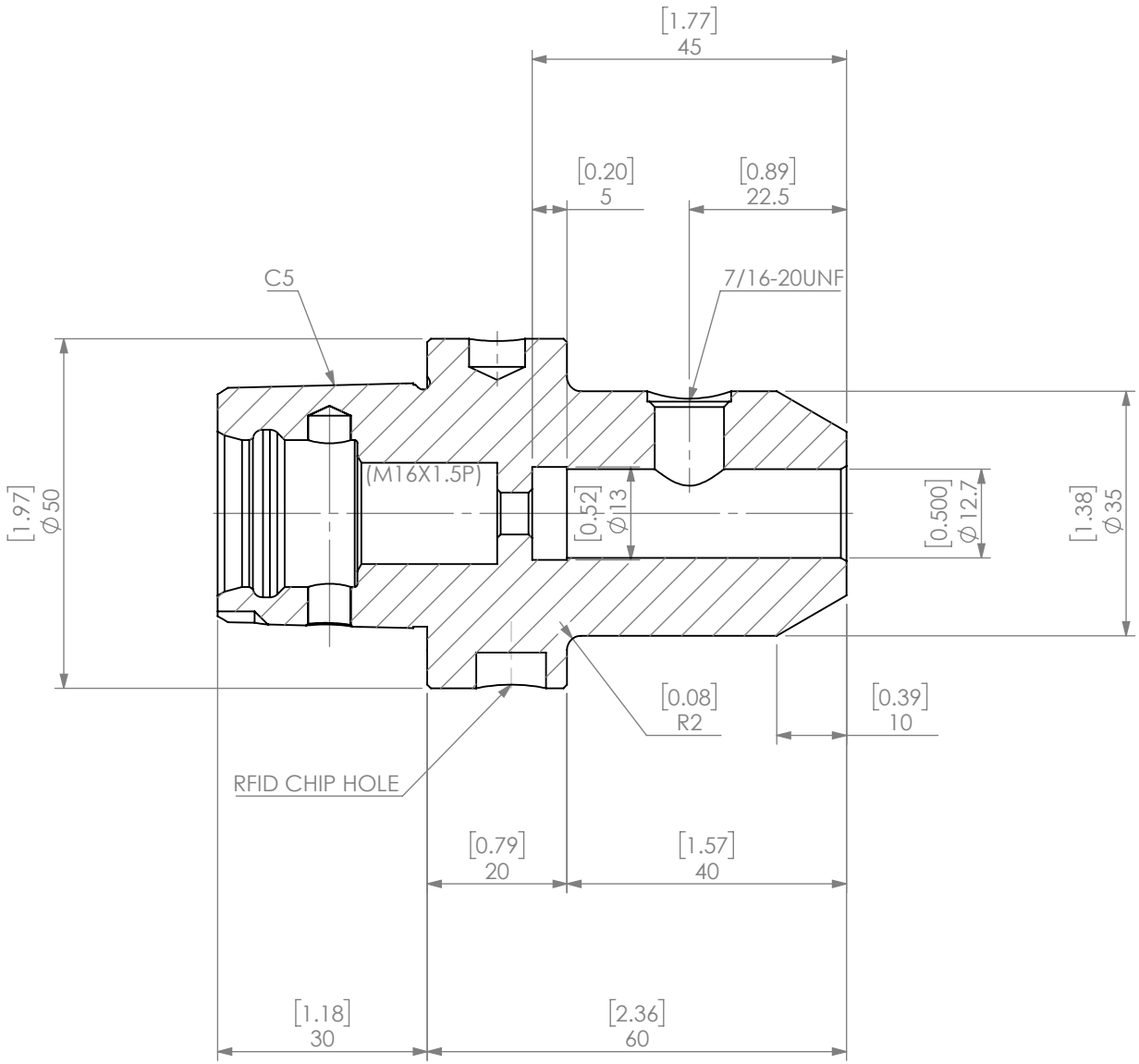

PROPRIETARY AND CONFIDENTIAL

THE INFORMATION CONTAINED IN THIS DRAWING IS THE SOLE PROPERTY OF LYNDEX NIKKEN. ANY REPRODUCTION IN PART OR AS A WHOLE WITHOUT THE WRITTEN PERMISSION OF LYNDEX NIKKEN IS PROHIBITED. DRAWING SUBJECT TO CHANGE WITHOUT NOTICE.

	NAME	DATE
DRAWN	AM	01/13/2021

NOTES:
SCREW#:S7/16-20

C5 END MILL HOLDER 1/2"

LYNDEX NIKKEN

SIZE	DWG. NO.	REV.
A	C5-EM0500-60	

SCALE 1:1 SHEET 1 OF 1

5 4 3 2 1