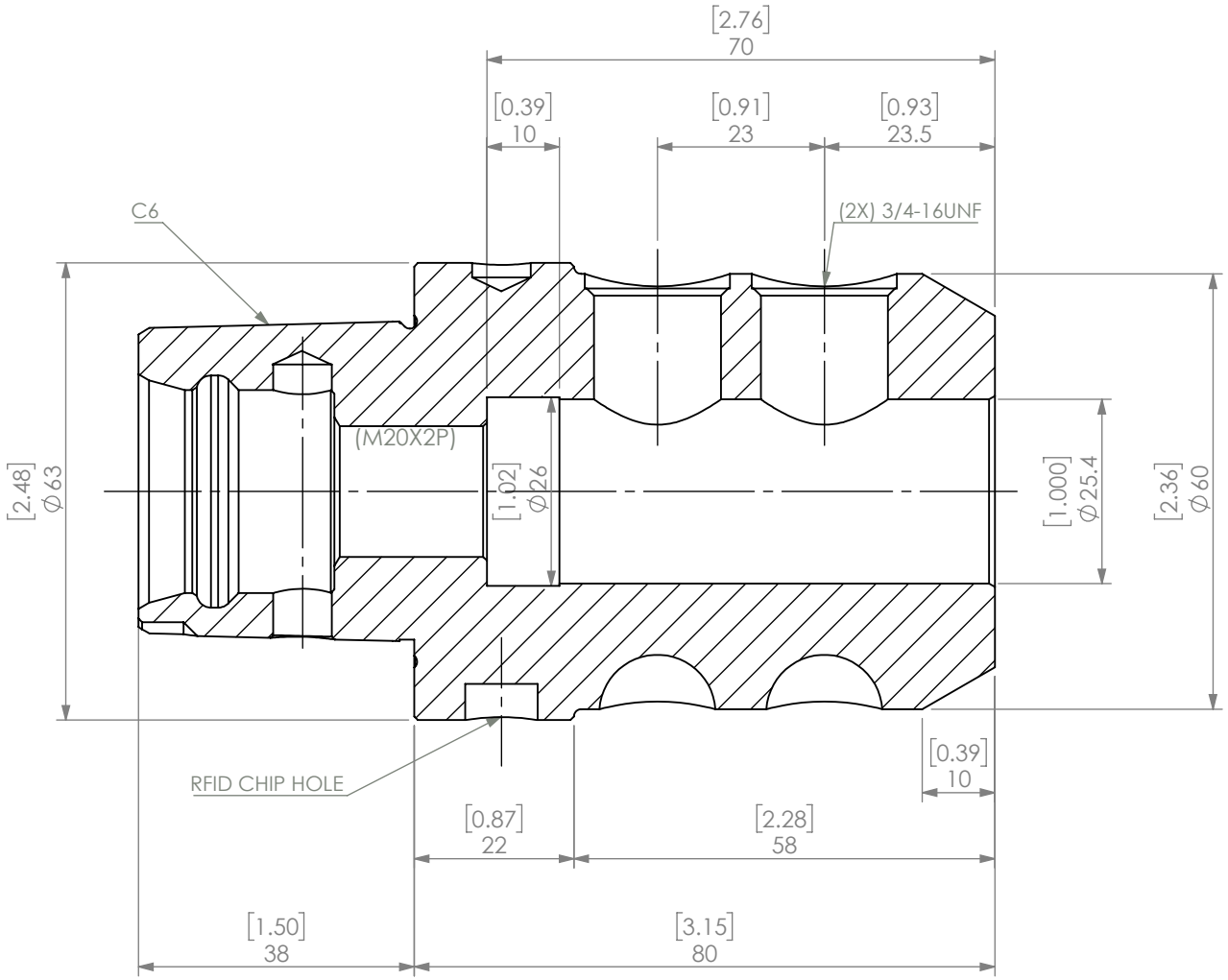


**PROPRIETARY AND CONFIDENTIAL**

THE INFORMATION CONTAINED IN THIS DRAWING IS THE SOLE PROPERTY OF LYNDEX NIKKEN. ANY REPRODUCTION IN PART OR AS A WHOLE WITHOUT THE WRITTEN PERMISSION OF LYNDEX NIKKEN IS PROHIBITED. DRAWING SUBJECT TO CHANGE WITHOUT NOTICE.

| | NAME | DATE |
|---|---|---|
| DRAWN | JA | 1/13/2021 |

NOTES:

C6 END MILL HOLDER 1.0"

LYNDEX NIKKEN

| SIZE | DWG. NO. | REV. |
|---|---|---|
| A | C6-EM1000-80 | |

SCALE 1:1 SHEET 1 OF 1

5 4 3 2 1