Symbol	Date	Rev. by	Notice	Check
1 x 4	220523	Shibata	IMPROVE	
2 x				
3 x				
4 x				

NIKKEN KOSAKUSHO WORKS., LTD. ALL Rights Reserved

Specifications	
Max. rpm	10000r/min 1
Gear ratio	1:4
θ	Location 360°
ØD	Ø3.0-Ø16.0
Weight	approx 11.0Kg

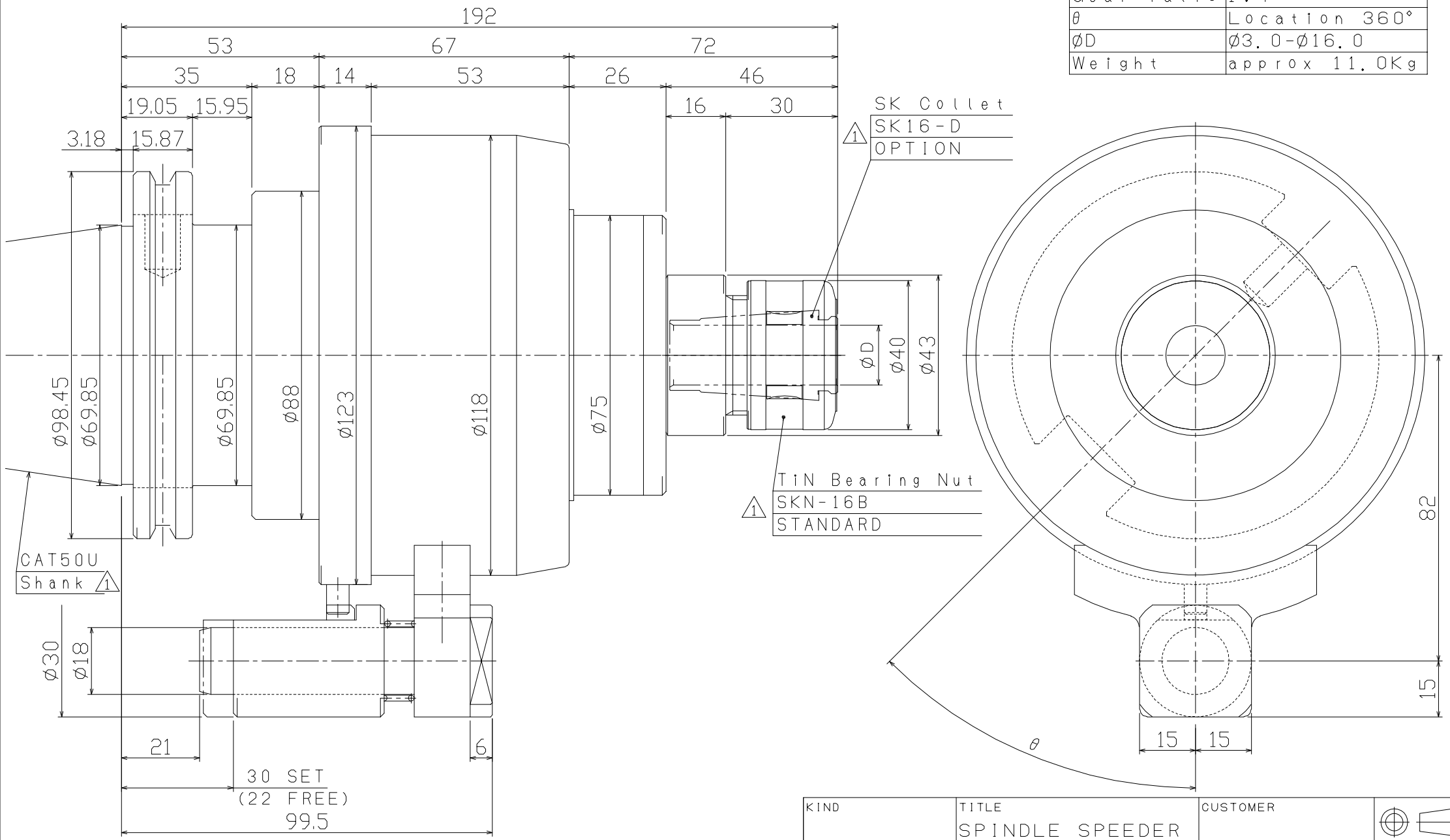

KIND	TITLE	CUSTOMER	
	SPINDLE SPEEDER		
MACHINE MODEL	CODE NO.	DESIGNED / CHECKED	APPROVED
	CAT50U-NX4-192	MAEMURA	
SCALE 1:1	NIKKEN KOSAKUSHO WORKS, LTD.	DIR-NAME	NXA1
DATE 2004.03.11		DRWG NO.	NXA041-08001/1