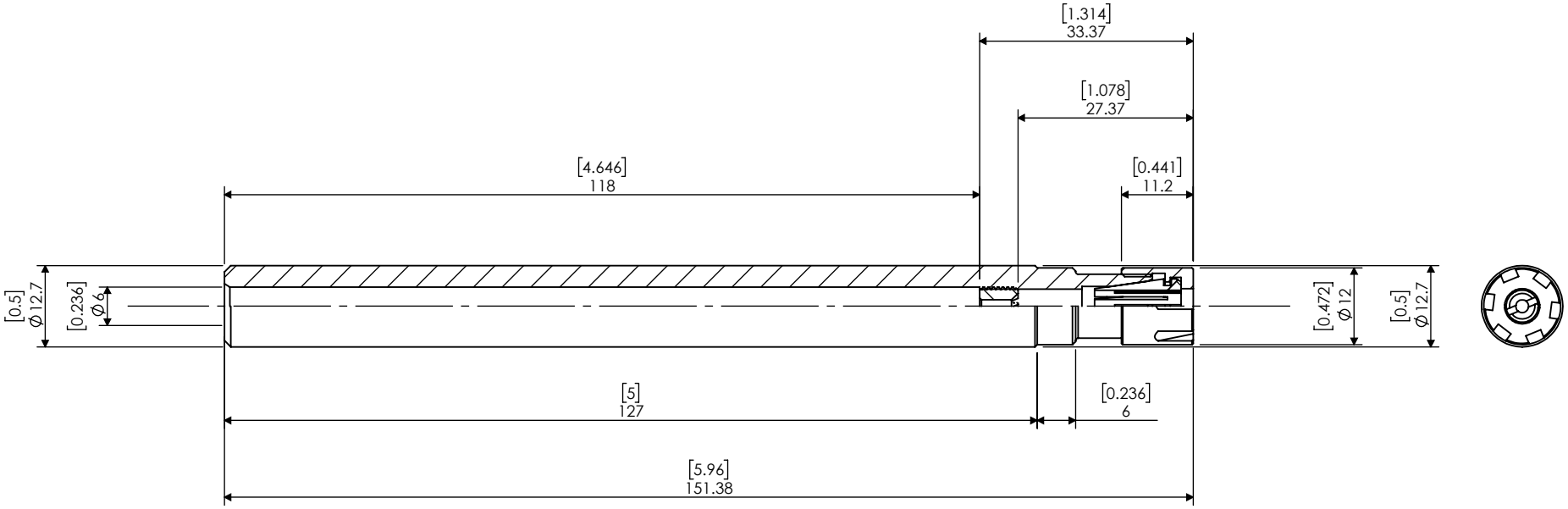

ITEM NO.	PART NUMBER	DESCRIPTION	QTY.
4	E08-NUT-MINI	ER8 MINI NUT CROWN STYLE [M10-P1.0]	1
3	ER8-XXX	ER8 COLLET [OPTION]	1
2	ER08-SCREW(C)	ER8 BACK UP SCREW [M6X0.75] COOLANT TAPER NOSE [OPTION]	1
1	ER8-EXT-500M	1/2" STRAIGHT SHANK EXTENSION ER8 MINI-NUT	1

PROPRIETARY AND CONFIDENTIAL

THE INFORMATION CONTAINED IN THIS DRAWING IS THE SOLE PROPERTY OF LYNDEX NIKKEN. ANY REPRODUCTION IN PART OR AS A WHOLE WITHOUT THE WRITTEN PERMISSION OF LYNDEX NIKKEN IS PROHIBITED. DRAWING SUBJECT TO CHANGE WITHOUT NOTICE.

NOTES:

1/2" STRAIGHT SHANK EXTENSION ER8 MINI-NUT

LYNDEX NIKKEN

SIZE	DWG. NO.	REV.
A	ER8-EXT-500M	1
SCALE 1:1		SHEET 1 OF 1

5 4 3 2 1