Symbol	Date	Rev. by	Notice	Check
1 x				
2 x				
3 x				
4 x				

NIKKEN KOSAKUSHO WORKS., LTD. All Rights Reserved.

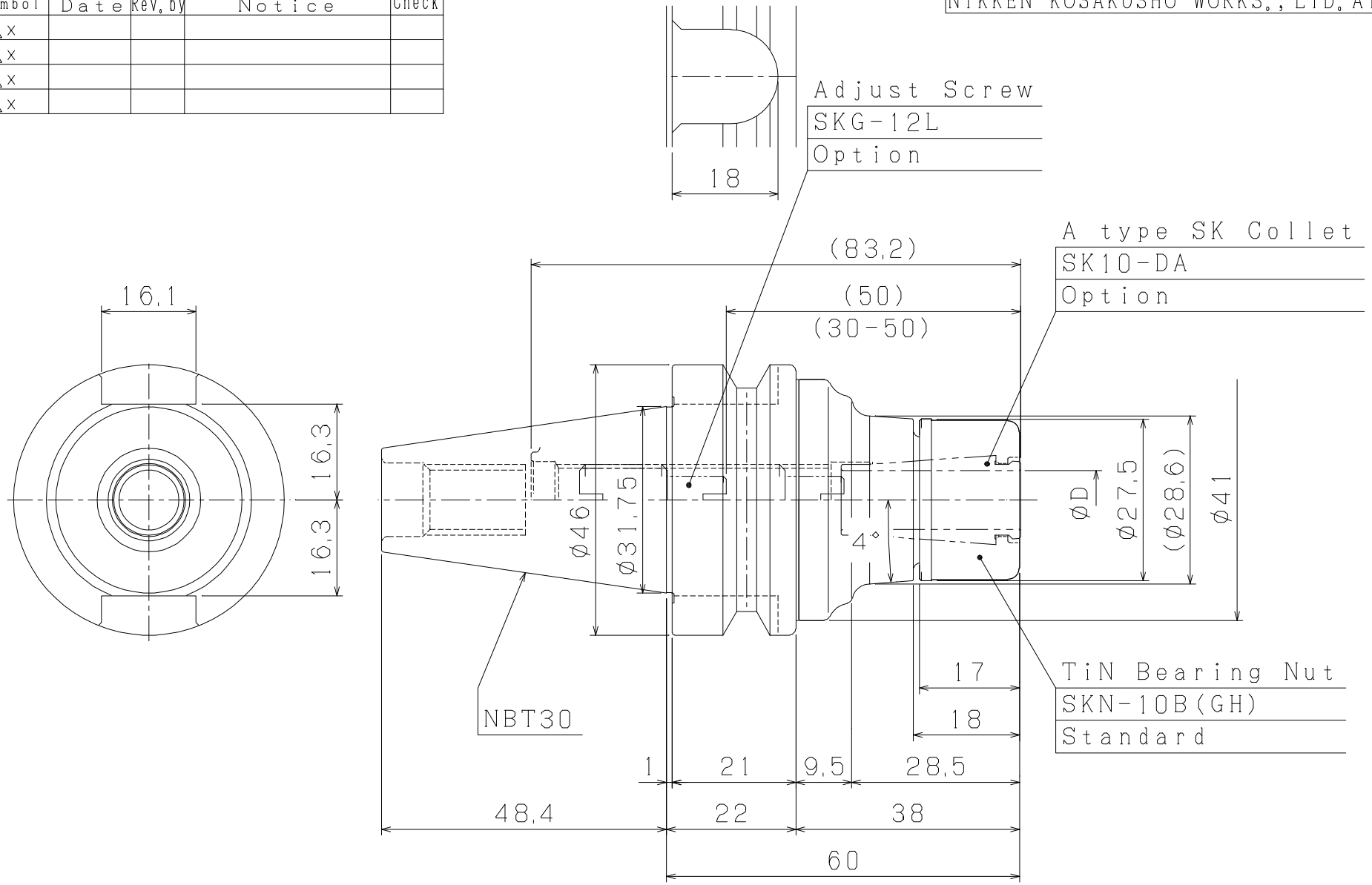

KIND NC5TS-40	TITLE MAJOR DREAM HOLDER	CUSTOMER		
MACHINE MODEL	CODE NO. NBT30-MDSK10-60	DESIGNED Maemura	CHECKED	APPROVED
SCALE 1/1 DATE 2015.02.10	NIKKEN KOSAKUSHO WORKS, LTD.	DIR-NAME DRWG NO.	NCK1 NCK06-40107/0	