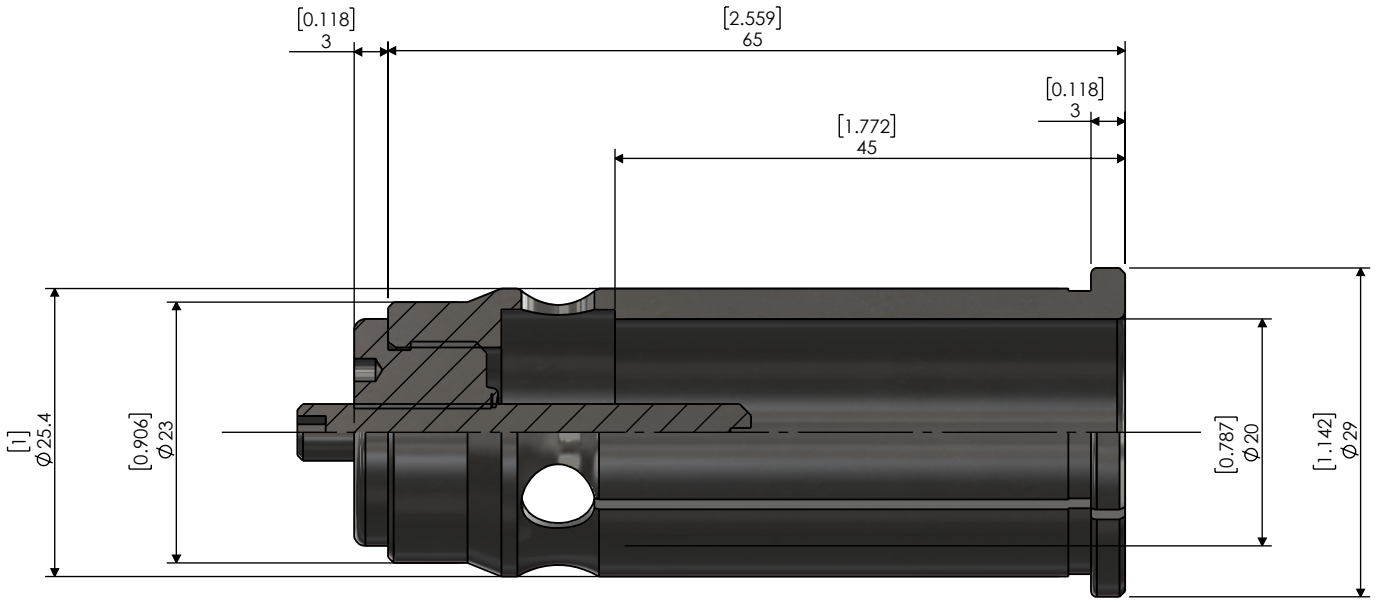

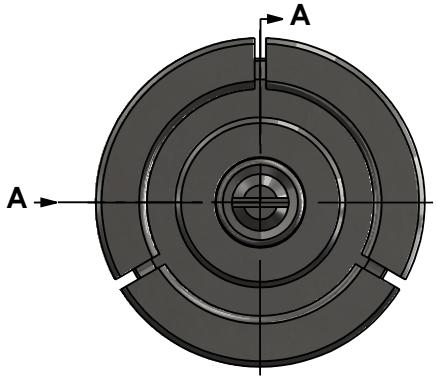

SECTION A-A

PROPRIETARY AND CONFIDENTIAL

THE INFORMATION CONTAINED IN THIS DRAWING IS THE SOLE PROPERTY OF LYNDEX NIKKEN. ANY REPRODUCTION IN PART OR AS A WHOLE WITHOUT THE WRITTEN PERMISSION OF LYNDEX NIKKEN IS PROHIBITED. DRAWING SUBJECT TO CHANGE WITHOUT NOTICE.

NOTES:

STRAIGHT DEPTH ADJ COLLET/SLEEVE OD1" ID20MM

LYNDEX NIKKEN

SIZE	DWG. NO.	REV.
A	NK1-20	1
SCALE 1.5:1		SHEET 1 OF 1

5 4 3 2 1