Symbol	Date	Rev.by	Notice	Check
△1 x 1	220419	Y,M	Improve	
△2 x				
△3 x				
△4 x				

NIKKEN KOSAKUSHO WORKS.,LTD.All Rights Reserved .

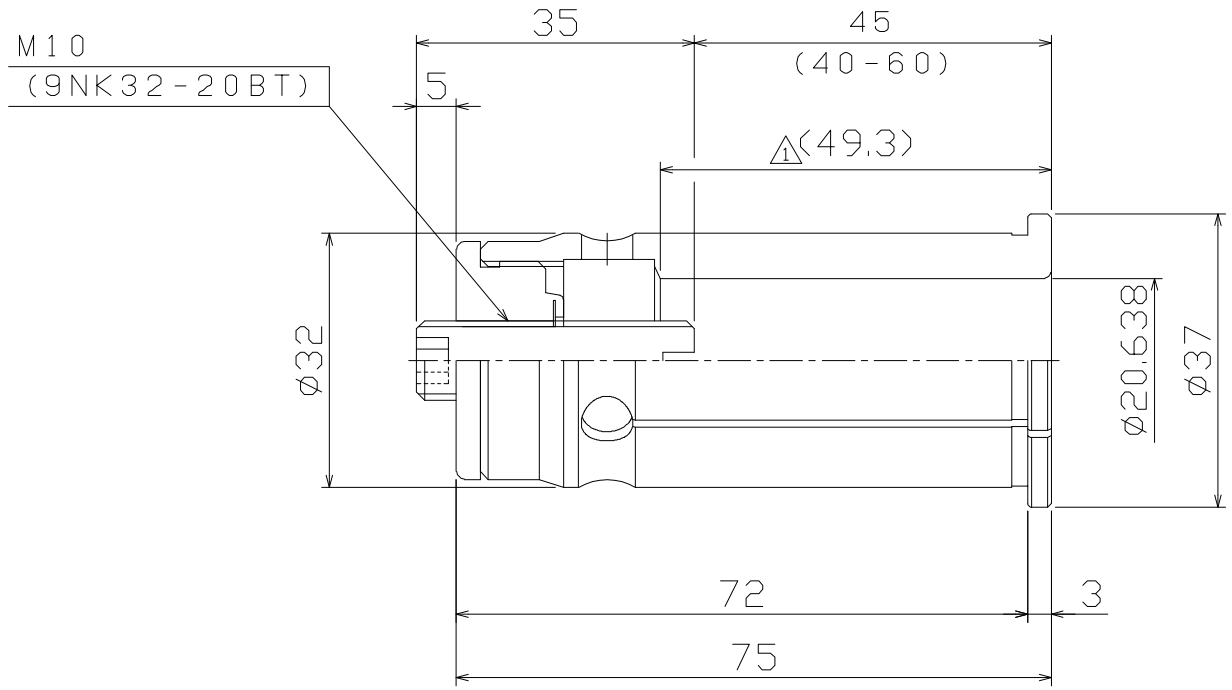

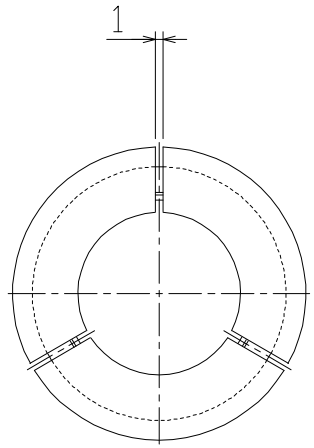

KIND NK32	TITLE Straight Collet	CUSTOMER		
MACHINE MODEL	CODE NO. NK32-13/16	DESIGNED Isohama	CHECKED	APPROVED
SCALE 1 : 1	NIKKEN KOSAKUSHO WORKS, LTD.	DIR-NAME	CKA1	
DATE 2022. 03. 02		DRWG NO.	CKA04-02113/1	