Symbol	Date	Rev.by	Notice	Check
△1 x 3	220401	Shibata	modify	
△2 x				
△3 x				
△4 x				

NIKKEN KOSAKUSHO WORKS., LTD. All Rights Reserved .

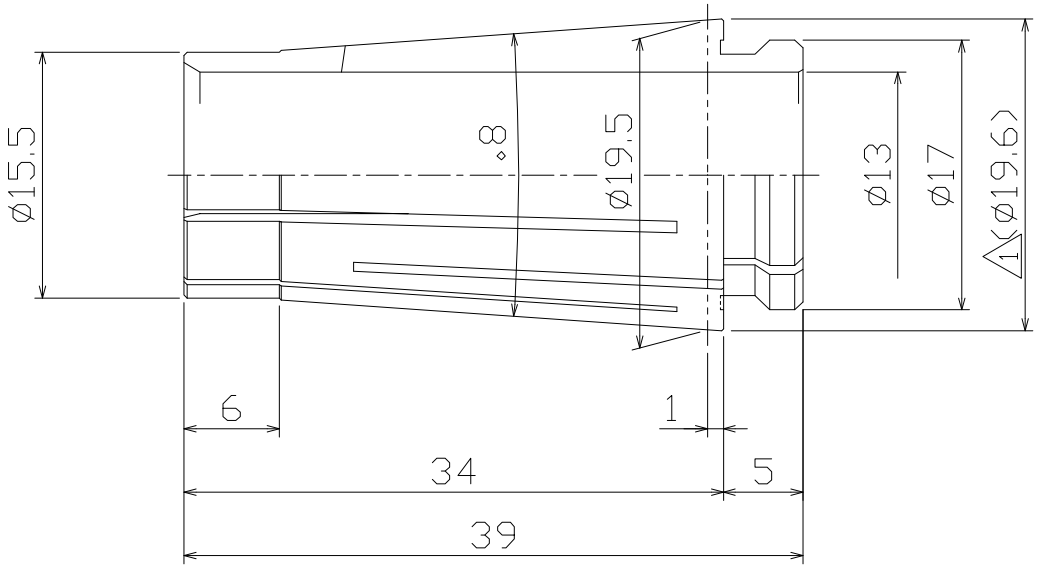

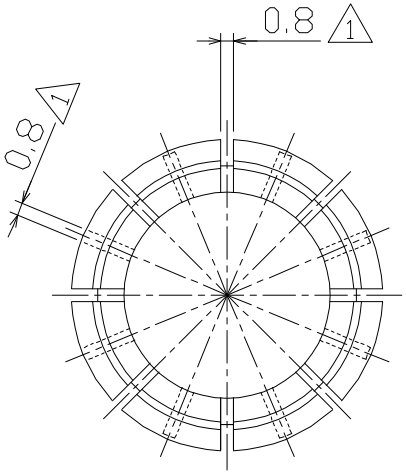

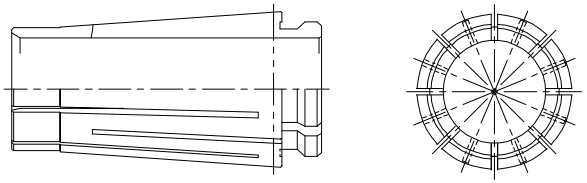

S = 1 : 1

KIND SK13		TITLE CENTER-THRU COOLANT COLLET	CUSTOMER	
MACHINE MODEL		CODE NO. SK13-13AC	DESIGNED S.Maemura	CHECKED / APPROVED
SCALE	2:1 (1:1)	NIKKEN KOSAKUSHO WORKS, LTD.	DIR-NAME	SJA1
DATE	2017.04.14		DRWG NO.	SJA40-92013/1