Symbol	Date	Rev.by	Notice	Check
1 x				
2 x				
3 x				
4 x				

NIKKEN KOSAKUSHO WORKS.,LTD.All Rights Reserved .

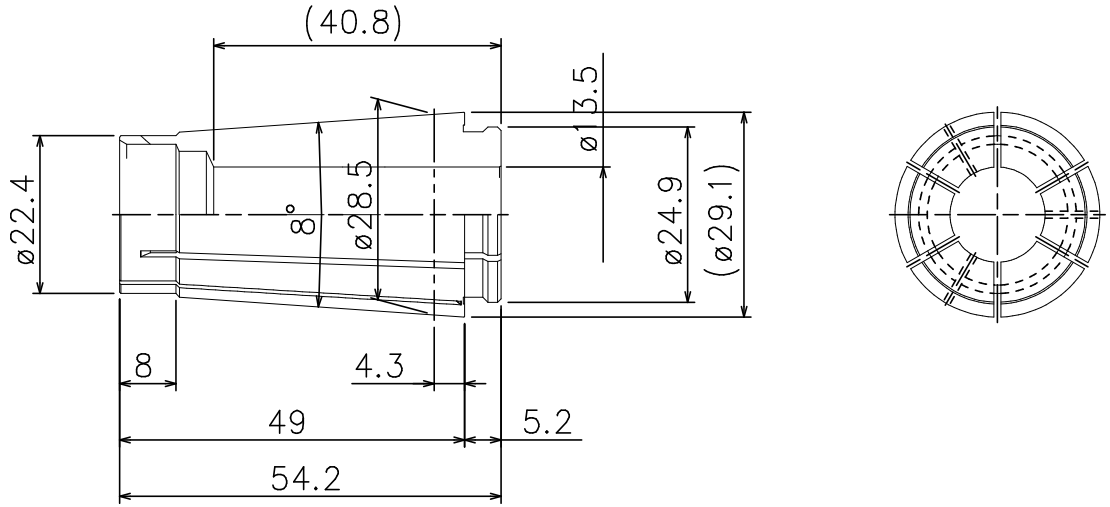

KIND SK20	TITLE SLIM CHUCK COLLET	CUSTOMER		
MACHINE MODEL	CODE NO. SK20-13.5	DESIGNED E.Nakai	CHECKED	APPROVED
SCALE 1/1	NIKKEN KOSAKUSHO WORKS, LTD.	DIR-NAME	SJA1	
DATE 2022.02.28		DRWG NO.	SJA29-01024/0	