Ref No. 551-14-2009-AUG

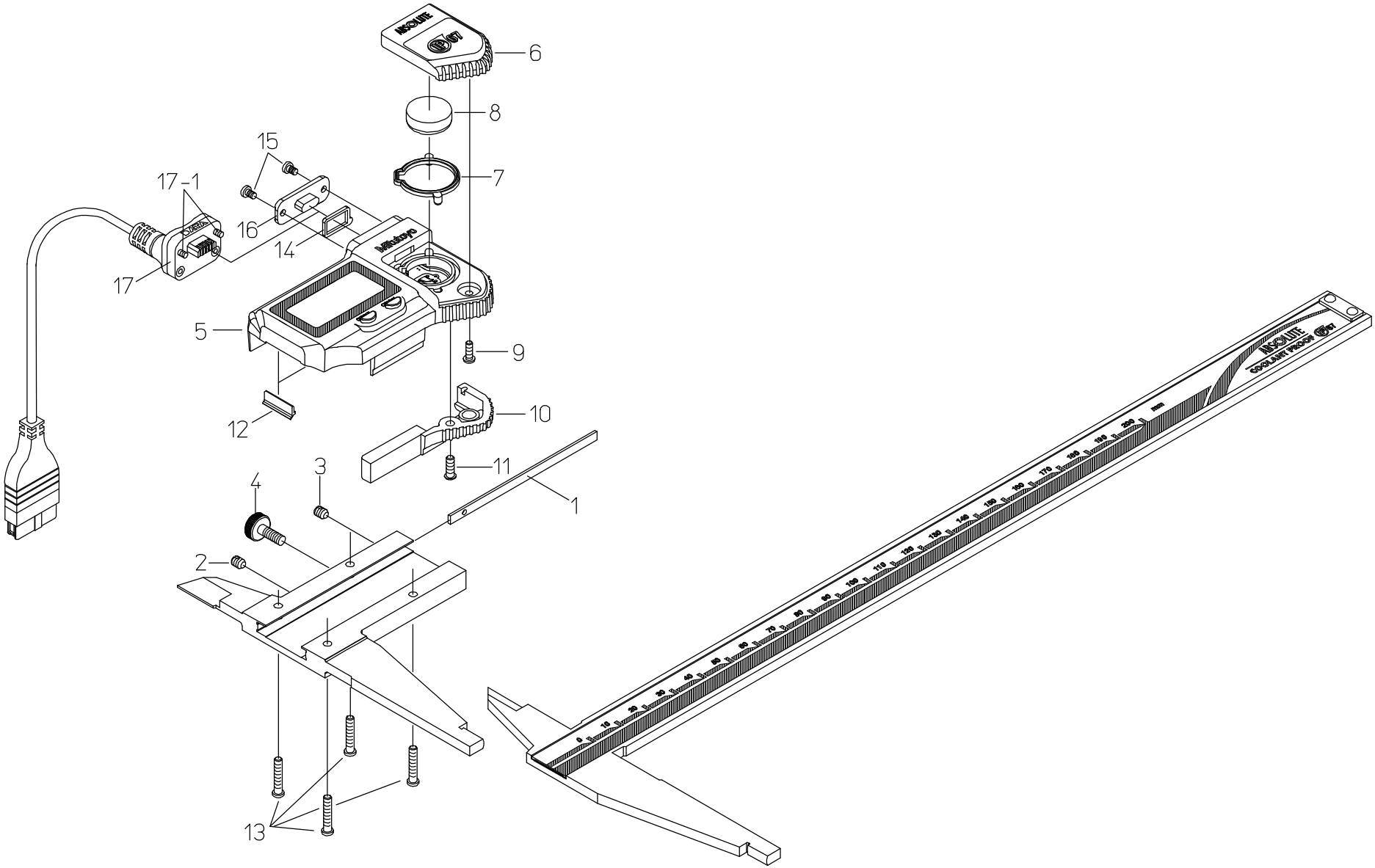
6
8
7
15
17-1
16
14
17
5
9
12
10
11
3
4
1
2
13
MICROLITE
SCRIBE-A-MATIC
SCRIBE-A-MATIC
SCRIBE-A-MATIC

書類NO, 551-14

KEY NO,	ブヒンメイ	PART NAME	販売区分 CATEGORY	CODE NO. コードNO. 551-301-10 CDN-P20PMX	551-311-10 CDN-P8″PMX		備考 COMMENTS
1	ｲﾀﾊﾞﾈ	GIB, SLIDER		06ACA200			
2	ﾈｼﾞ､ｾｯﾄﾈｼﾞ	SCREW, GIB SETTING		05CAB037			
3	ﾈｼﾞ､ｵｼﾈｼﾞ	SCREW, GIB PRESSING		05CAB036			
4	ﾈｼﾞ､ｸﾗﾝﾌﾟ	CLAMP, SLIDER		541985			
5	ﾋｮｳｼﾞﾓｼﾞｭｰﾙASSY	READING UNIT ASSY	Y	06ADJ552A	06ADJ552B		
6	ﾃﾞﾝﾁﾌﾞﾀ	COVER CELL		05SZA317			
7	ﾃﾞﾝﾁﾌﾞﾀﾊﾟｯｷﾝ	PACKING, COVER OF CELL		05SAA372			
8	ﾎﾞﾀﾝﾃﾞﾝﾁ	BATTERY		938882			
9	ﾈｼﾞ､ｼﾞｭｳｼﾞﾅﾍﾞｺ(M1.7×5)	SCREW, COVER OF CELL		05SAA379			
10	ﾕﾋﾞｶｹ	KNOB, SLIDER		05CAB012			
11	ﾈｼﾞ､ｼﾞｭｳｼﾞﾅﾍﾞｺ(ﾖﾋﾞ2×5.8)	SCREW, HOOK ROLLER		05CAA893			
12	ﾜｲﾊﾟｰ	WIPER	Y	198551			
13	ﾈｼﾞ､ｼﾞｭｳｼﾞﾅﾍﾞｺ(ﾖﾋﾞ2×10.5)	SCREW, READING UNIT ASSY	Y	05CAA926			
14	ｺﾈｸﾀﾊﾟｯｷﾝ	PACKING, CONNECTOR		09GAA374			
15	ﾈｼﾞ､ｼﾞｭｳｼﾞﾅﾍﾞｺ(ﾖﾋﾞ1.7×2.5)	SCREW, CAP CONNECTOR		09GAA376			
16	ｺﾈｸﾀｷｬｯﾌﾟ	CAP CONNECTOR		09GAA372			
17	【ｵﾌﾟｼｮﾝ】	【OPTION】					
	ｾﾂｿﾞｸｹｰﾌﾞﾙ(1M)	CONNECTING CABLE(1M)		05CZA624			
	ｾﾂｿﾞｸｹｰﾌﾞﾙ(2M)	CONNECTING CABLE(2M)		05CZA625			
17-1	ﾈｼﾞ､ｼﾞｭｳｼﾞﾅﾍﾞｺ(M1.7×6.5)	SCREW, CONNECTING CABLE		05CAA958			
	【梱包資材】	【PACKING】					
	ｹｰｽ､PPｹｰｽ	PP CASE		05RAB350			
	ｹｰｽ､ｶﾗｰ(1ｺ)	COLOR CASE		06ADE892			