How to choose your boring tool

1 Define type of operation

Identify your type of operation and note characteristics regarding the component to be machined, workpiece material and machine capabilities.

2 Select a boring system

Use the tool program overview to find the system that meets requirements of the operation - roughing or finishing as well as conditions

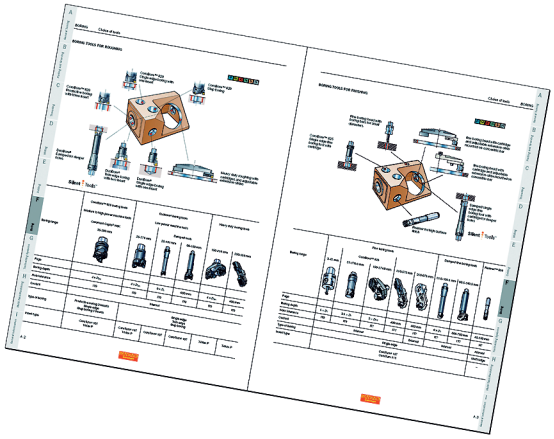

3 Define the boring diameter and hole requirements

Select the tool that covers the boring diameter range for the operation, surface finish and tolerances

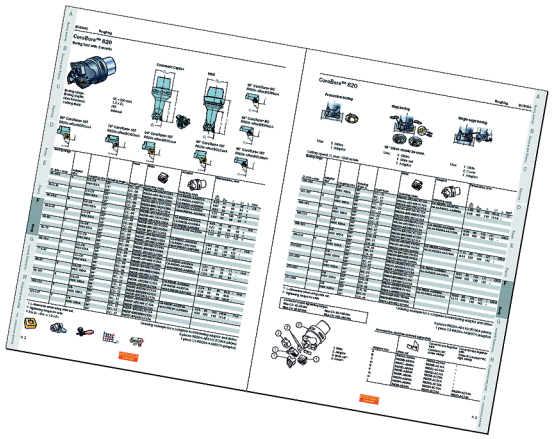

4 Choose a lead angle

Based on the lead angle selected, choose the appropriate insert carrier from the ordering chart.

This will also indicate the most suitable insert.

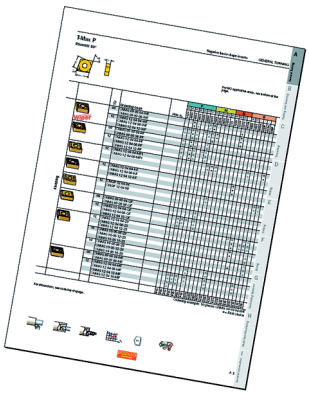

5 Select an adapter

Choose an adapter based on

- Coupling size
- Boring depth

See chapter G

6 Select inserts for the tool

Establish the inserts based on the style and size recommendations.

Select an insert grade based on type of workpiece material and machining conditions.

See chapter A

For cutting data recommendations, see page F91.

For more technical information, see our Metalcutting Technical Guide.

BORING

Applications

Tool selection guide
Roughing F4
Finishing/Reaming F5

Products

Roughing

CoroBore® 820 - Three insert design F6
Coromant Capto®, boring range 35 - 306 mm (1.378 - 12.047 inch) F8
CoroBore® 820 XL - Two insert design for large diameters F7
Boring range 298 - 540 mm (11.732-21.260 inch) F14
Boring range 538 - 1260 mm (21.181-49.606 inch) F16

DuoBore® - Two insert design F19
Coromant Capto® - 25-270 mm (.984-10.630 inch) F20
Dampened Coromant Capto® - 25-150 mm (.984-5.906 inch) F24

Heavy Duty - Two insert design
Coromant Capto®, boring range 150-300 mm (5.906 - 11.811 inch) F28

Finishing

CoroBore® 825 - for conventional or back boring F30
Cylindrical shank - 19-42 mm (.748-1.654 inch) F32
Coromant Capto® and HSK - 19-176.6 mm (.748-6.953 inch) F34
Dampened Coromant Capto® - 23-176.6 mm (.906-6.953 inch) F38

CoroBore® 825/826 - for conventional boring or back boring F30
Coromant Capto® - 150-324.6 mm (5.906-12.779 inch) F36
Dampened Coromant Capto® - 150-324.6 mm (5.906-12.779 inch) F40

CoroBore® 825/826 XL - For large diameters F31
Boring range 298 - 564.6 mm (11.732-22.228 inch) F42
Boring range 538 - 1284.6 mm (21.181-50.575 inch) F44

Fine boring heads F50
Coromant Capto® and HSK fine boring heads - 3-36 mm (.118-1.417 inch) F50
High speed Coromant Capto® and HSK fine boring heads - 3-26 mm (.118-1.024 inch) F51

CoroBore® XL holders

F46
Coromant Capto® adapter F47
Solid holder F48
Centering plug F49

Other tools
Boring bars for fine boring heads F52
Cartridges for fine boring heads F54
T-Max U fine boring units - For straight or angular mounting F55
Coromant flexible boring tool F58

Reaming

F100
Reamer™ 830 - High feed precision tool for through holes F101

Inserts

F59

Cutting data and chip control

F91

Spare parts

F103

BORING TOOLS FOR ROUGHING

P M K N S H

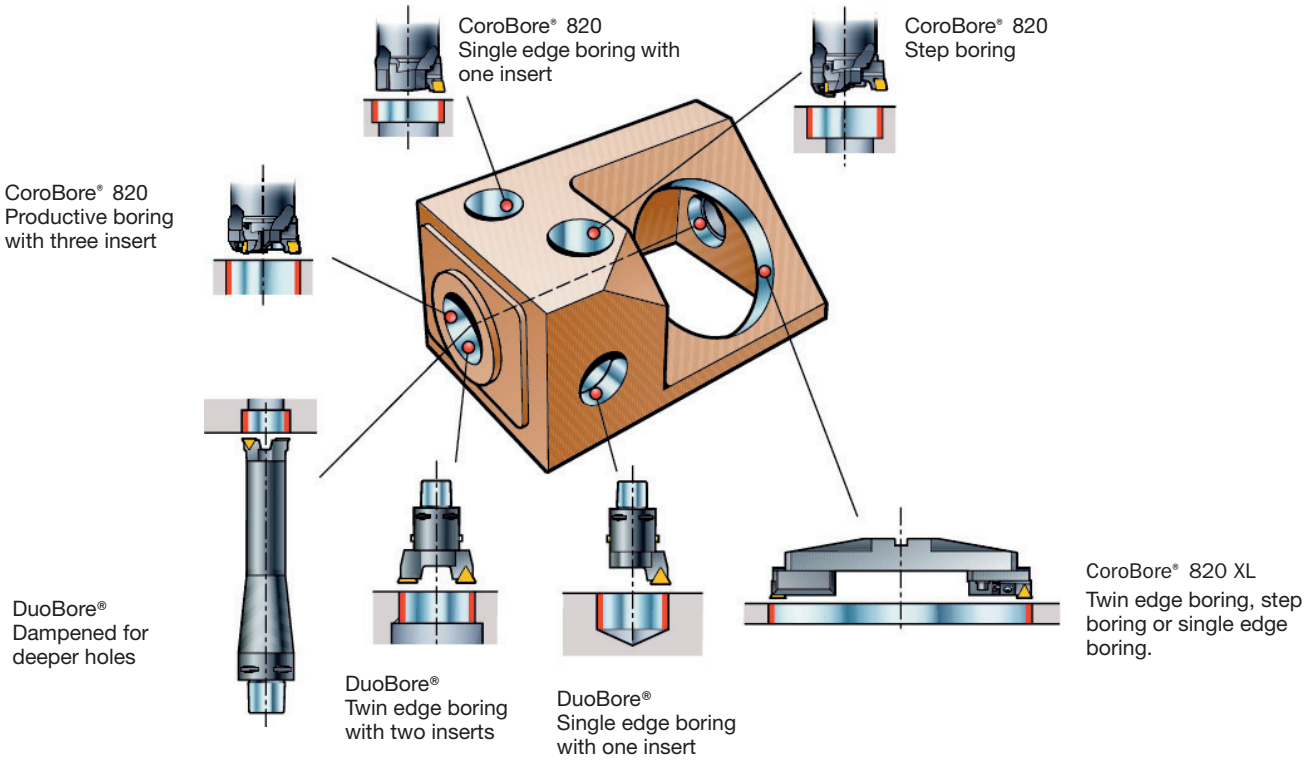

Silent Tools®

	CoroBore® 820	Duobore®			Heavy Duty	CoroBore® 820 XL	
	Medium to high power machine tools	Low power machine tools					
	Coromant Capto®		Dampened tools				
Boring range, mm (inch)	35-306 (1.378-12.047)	25-270 (.984-10.630)	25-101 (.984-3.976)	99-150 (3.898-5.906)	150-300 (5.906-11.811)	298-540 (11.732-21.260)	538-1260 (21.181-49.606)
		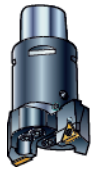			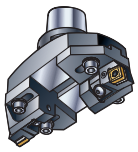		
Page	F8	F20	F24	F26	F28	F14	F16
Boring depth	4 x D_{5m}	4 x D_{5m}	6 x D_{5m}	600 (23.622) - 700 (27.559)	4 x D_{5m}		
Hole tolerance	IT9	IT9	IT9	IT9	IT9	IT9	IT9
Cutting fluid	Internal						
Type of boring	Productive boring 3 inserts Step boring 3 inserts Single edge boring	Twin edge boring 2 inserts Step boring 2 inserts Single edge boring					
Insert type	CoroTurn® 107 T-Max P	CoroTurn® 107 T-Max P	CoroTurn® 107	CoroTurn® 107	T-Max P	CoroTurn® 107 T-Max P	CoroTurn® 107 T-Max P

SANDVIK Coromant

BORING TOOLS FOR FINISHING

P M K N S H

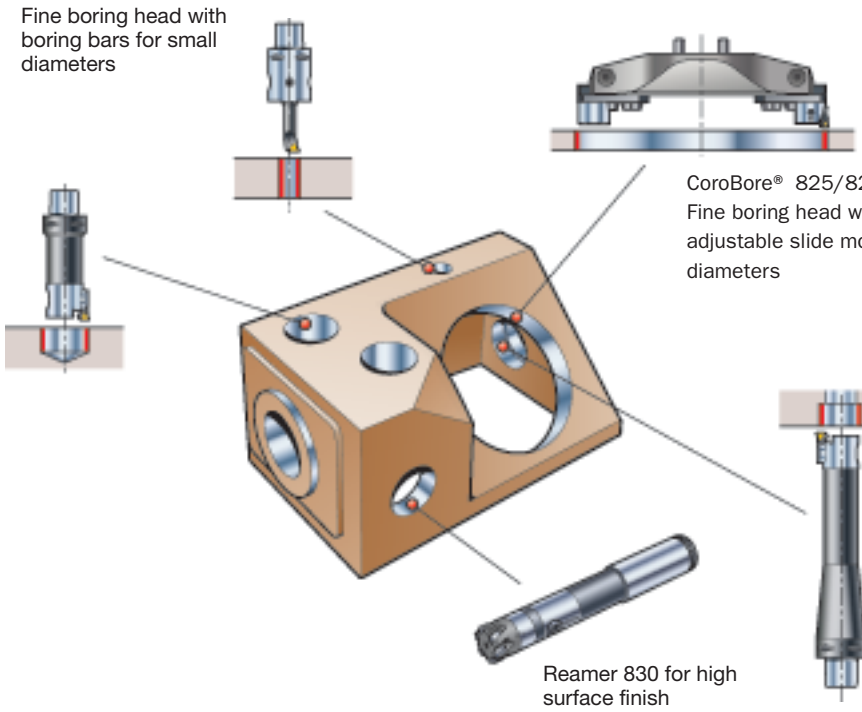

	Fine boring tools					Dampened fine boring tools		Reamer 830
Boring range, mm (inch)	3-36 (.118-1.417)	CoroBore® 825 19-176.6 (.748-6.953)	CoroBore® 825 CoroBore® 826 150-324.6 (5.906-12.779)	CoroBore® 825 XL CoroBore® 826 XL 298-564.6 (11.732-22.228)	538-1284.6 (21.181-50.575)	CoroBore® 825 23-176.6 (.906-6.953)	CoroBore® 825 CoroBore® 826 150-324.6 (5.906-12.779)	10-31.75 (.394-1.250)
							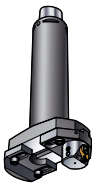	
Page	F50	F32	F36	F42	F44	F38	F40	F100
Boring depth	109 (4.29) ≤ 60 (2.362)	4 x D_{5m}	4 x D_{5m}			6 x D_c	6 x D_{5m}	45-167 mm (1.772-6.575)
Hole tolerance	IT6	IT6	IT6	IT6	IT6	IT6	IT6	H7
Cutting fluid	Internal							
Type of boring	Single edge							Multi edge
Insert type	CoroTurn® 107 CoroTurn® 111							–

CoroBore® 820

Rough boring tool - three insert design for maximum productivity

Optimal productivity in medium to high power machine tools

Short, rigid and compact
- Maximum stability

Cutting fluid through the tool
- Good chip evacuation

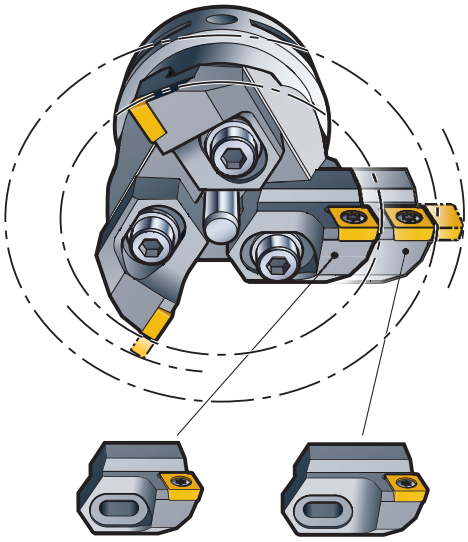

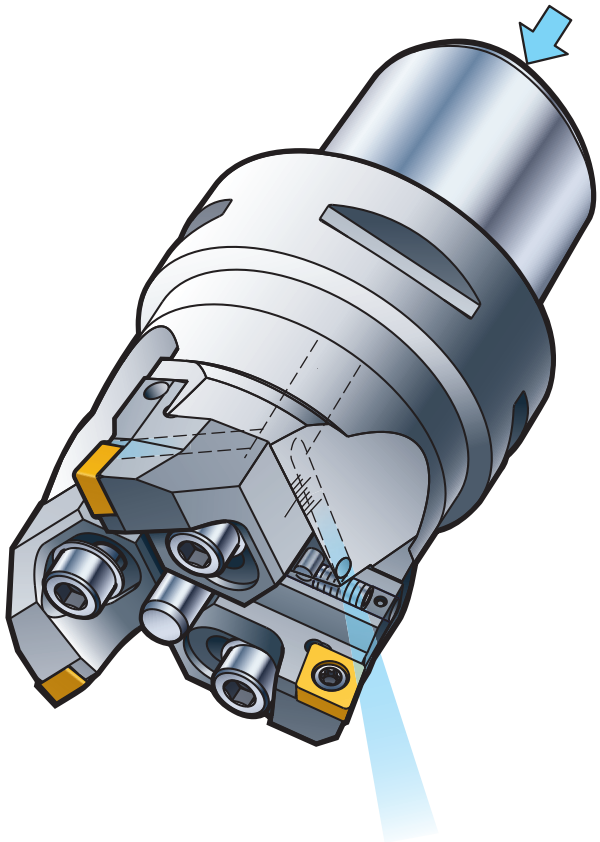

Optional slide assemblies, individually adjustable axially and radially
- Versatility
- Economy
- Less inventory

Productive boring

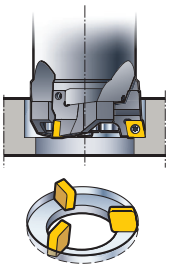

Step boring

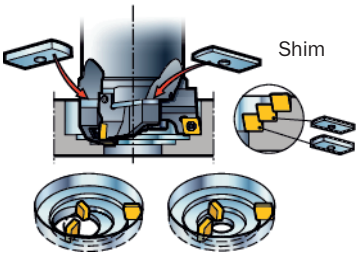

Single edge boring

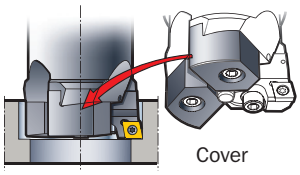

CoroTurn® RC rigid clamping
- First choice for diameters 166-306 mm (6.535-12.047 inch)

CoroTurn® 107 screw clamping
- Wide choice of insert types

ISO application areas:

P M K N S H

SANDVIK Coromant

CoroBore® 820 XL

Rough boring tool system

For large diameter boring

Rigid system for maximum stability with internal coolant supply

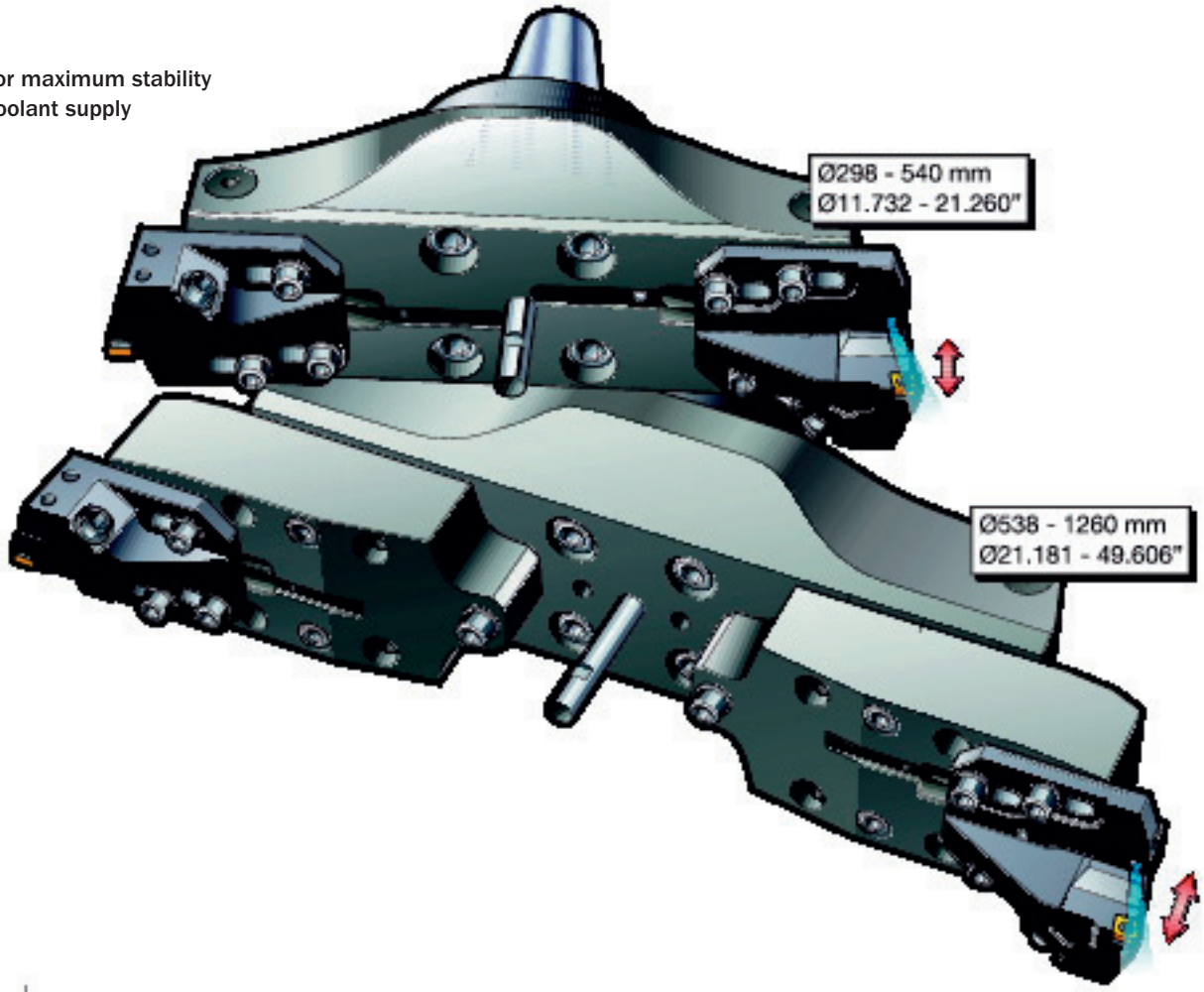

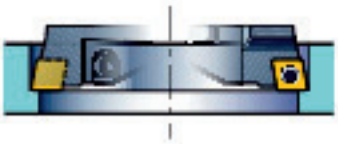

Twin-edge boring

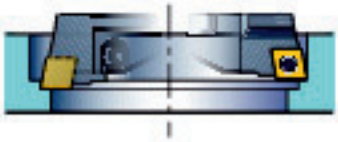

Step boring

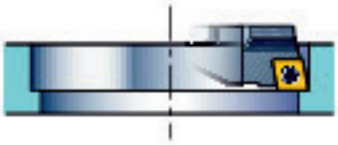

Single-edge boring

Axially adjustable cartridges

For step boring or to ensure the same axial position for the two inserts

T-Max® P, CoroTurn® RC Rigid clamping

For applications that require strong inserts in stable conditions

CoroTurn 107 screw clamping system

For applications that require lower cutting forces

CoroBore® 820

Boring tool with 3 inserts
Coromant Capto®

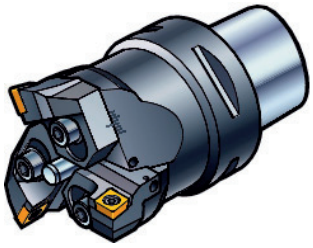

Productive boring

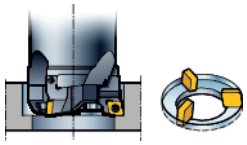

Step boring

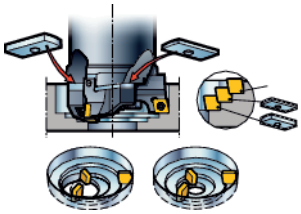

Single edge boring

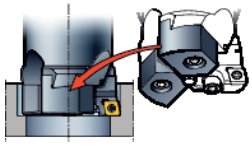

Boring range:	35-306 mm (1.378-12.047 inch)		0° slides should be used.	
		3 Slides	3 Slides[3]	1 Slide
Boring depth:	4 × D_{5m}	1 Adapter	1 Shim set	2 Cover
Hole tolerance:	IT9		1 Adapter	1 Adapter
Cutting fluid:	Internal			

Cutting speed, v_c max: 1200 m/min (3937 ft/min)

Boring range, mm (inch) D_c min – max	Adapter size	Coupling size	Entering angle	Lead angle	Insert type ISO	ANSI	*iC*	1. Slide[3] Ordering code	2. Adapter Ordering code
35–40.5	A	C3-C6	90°	0°	CC.. 06	CC.. 2(1.5)	1/4	R820A-AR11SCFC06A	C3-R820A-AA3037A
(1.378–1.594)			75°	15°	CC.. 06	CC.. 2(1.5)		R820A-AR11SCKC06A	C4-R820A-AA3072A
			95°	-5°	CC.. 06	CC.. 2(1.5)		R820A-AR11SCLC06A	C5-R820A-AA3080A
39.5–45	A	C3-C6	90°	0°	CC.. 06	CC.. 2(1.5)	1/4	R820A-BR11SCFC06A	C6-R820A-AA3089A
(1.555–1.772)			75°	15°	CC.. 06	CC.. 2(1.5)		R820A-BR11SCKC06A	
			95°	-5°	CC.. 06	CC.. 2(1.5)		R820A-BR11SCLC06A	
44–50.5	B	C4-C6	90°	0°	CC.. 06	CC.. 2(1.5)	1/4	R820B-AR12SCFC06A	C4-R820B-AA3044A
(1.732–1.988)			75°	15°	CC.. 06	CC.. 2(1.5)		R820B-AR12SCKC06A	C5-R820B-AA3086A
			95°	-5°	CC.. 06	CC.. 2(1.5)		R820B-AR12SCLC06A	C6-R820B-AA3099A
49.5–56	B	C4-C6	90°	0°	CC.. 06	CC.. 2(1.5)	1/4	R820B-BR12SCFC06A	
(1.949–2.205)			75°	15°	CC.. 06	CC.. 2(1.5)		R820B-BR12SCKC06A	
			95°	-5°	CC.. 06	CC.. 2(1.5)		R820B-BR12SCLC06A	
49.5–56	B	C4-C6	90°	0°	CC.. 09	CC.. 3(2.5)	3/8	R820B-BR14SCFC09A	C4-R820B-AA3044A
(1.949–2.205)			84°	6°	SC.. 09	SC.. 3(2.5)		R820B-BR14SSYC09A	C5-R820B-AA3086A
			95°	-5°	CC.. 09	CC.. 3(2.5)		R820B-BR14SCLC09A	C6-R820B-AA3099A
55-63	C	C5-C6	90°	0°	CC.. 09	CC.. 3(2.5)	3/8	R820C-AR16SCFC09A	C5-R820C-AA3050A
(2.165–2.480)		HSK 63/A	84°	6°	SC.. 09	SC.. 3(2.5)		R820C-AR16SSYC09A	C6-R820C-AA3104A
			95°	-5°	CC.. 09	CC.. 3(2.5)		R820C-AR16SCLC09A	
62-70	C	C5-C6	90°	0°	CC.. 09	CC.. 3(2.5)	3/8	R820C-BR16SCFC09A	
(2.441–2.756)			84°	6°	SC.. 09	SC.. 3(2.5)		R820C-BR16SSYC09A	
			95°	-5°	CC.. 09	CC.. 3(2.5)		R820C-BR16SCLC09A	
62-70	C	C5-C6	90°	0°	CC.. 12	CC.. 43	1/2	R820C-BR18SCFC12A	C5-R820C-AA3050A
(2.441–2.756)			84°	6°	SC.. 12	SC.. 43		R820C-BR18SSYC12A	C6-R820C-AA3104A
			95°	-5°	CC.. 12	CC.. 43		R820C-BR18SCLC12A	
69-78.5	D	C5-C6	90°	0°	CC.. 09	CC.. 3(2.5)	3/8	R820D-AR18SCFC09A	C5-R820D-AA3052A
(2.717–3.091)			84°	6°	SC.. 09	SC.. 3(2.5)		R820D-AR18SSYC09A	C6-R820D-AA3060A
			95°	-5°	CC.. 09	CC.. 3(2.5)		R820D-AR18SCLC09A	
			90°	0°	CC.. 12	CC.. 43	1/2	R820D-AR18SCFC12A	
			84°	6°	SC.. 12	SC.. 43		R820D-AR18SSYC12A	
			95°	-5°	CC.. 12	CC.. 43		R820D-AR18SCLC12A	
77.5-87	D	C5-C6	90°	0°	CC.. 09	CC.. 3(2.5)	3/8	R820D-BR18SCFC09A	
(3.051–3.425)		HSK 63/A	84°	6°	SC.. 09	SC.. 3(2.5)		R820D-BR18SSYC09A	
			95°	-5°	CC.. 09	CC.. 3(2.5)		R820D-BR18SCLC09A	
			90°	0°	CC.. 12	CC.. 43	1/2	R820D-BR18SCFC12A	
			84°	6°	SC.. 12	SC.. 43		R820D-BR18SSYC12A	
			95°	-5°	CC.. 12	CC.. 43		R820D-BR18SCLC12A	

1) l_1 dimension when using shim set
2) Tightening torque for slide
3) For $D_c < D_{5m}$: $l_3 = 1.5 \times D_c$
4) Slides of type R820x-A... and R820x-B... with the same length can be combined for step boring over a larger diameter range.

F59

G6

F103
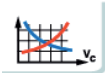
F90

F2

J2

SANDVIK Coromant

Coromant Capto®

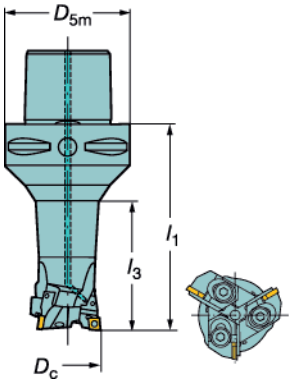

95° (-5°) CoroTurn® 107
R820x-xRxxSCLCxxA

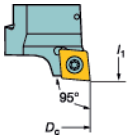

84° (6°) CoroTurn® 107
R820x-xRxxSSYCxxA

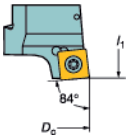

90° (0°) CoroTurn® RC
R820x-xRxxDCFNxxA

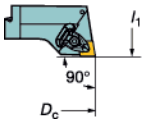

90° (0°) CoroTurn® 107
R820x-xRxxSCFCxxA

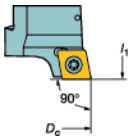

75° (15°) CoroTurn® 107
R820x-xRxxSCKCxxA

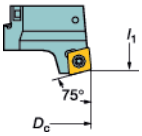

84° (6°) CoroTurn® RC
R820x-xRxxDSYNxxA

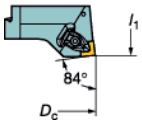

95° (-5°) CoroTurn® RC
R820x-xRxxDCLNxxA

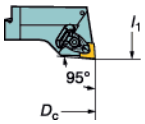

l_1 = programming length

Dimensions, mm (inch)							Accessories, must be ordered separately.		
Weight, kg (lbs)	D_{5m}	l_1	l_1[1]	l_3	Nm[2]	lbf-ft[2]	Shim set	Cover for CoroTurn® 107	Cover for CoroTurn® RC
0.3 (.7)	32 (1.260)	48 (1.890)	49 (1.929)	-	4.8	3.5	R820A-AS00A	R820A-AC10A	-
0.7 (1.5)	40 (1.575)	83 (3.268)	84 (3.307)	[3]					
0.9 (2.0)	50 (1.969)	91 (3.583)	92 (3.622)	[3]					
1.3 (2.9)	63 (2.480)	100 (3.937)	101 (3.976)	[3]					
0.7 (1.5)	40 (1.575)	56 (2.205)	57 (2.244)	-	9.0	6.6	R820B-AS00A	R820B-AC11A	-
1.2 (2.6)	50 (1.969)	98 (3.858)	99 (3.898)	[3]					
1.7 (3.7)	63 (2.480)	111 (4.370)	112 (4.409)	[3]					
0.7 (1.5)	40 (1.575)	58 (2.283)	59 (2.323)	-	9.0	6.6	R820B-AS00A	R820B-AC11A	-
1.2 (2.6)	50 (1.969)	100 (3.937)	101 (3.976)	[3]					
1.7 (3.7)	63 (2.480)	113 (4.449)	114 (4.488)	[3]					
1.0 (2.2)	50 (1.969)	66 (2.598)	67 (2.638)	-	16.0	11.8	R820C-AS00A	R820C-AC15A	-
2.1 (4.6)	63 (2.480)	120 (4.724)	121 (4.764)	-					
1.0 (2.2)	50 (1.969)	68 (2.677)	69 (2.717)	-	16.0	11.8	R820C-AS00A	R820C-AC15A	-
2.1 (4.6)	63 (2.480)	122 (4.803)	123 (4.843)	-					
1.2 (2.6)	50 (1.969)	70 (2.756)	71 (2.795)	-	16.0	11.8	R820D-AS00A	R820D-AC17A	-
2.2 (4.9)	63 (2.480)	78 (3.071)	79 (3.110)	-					

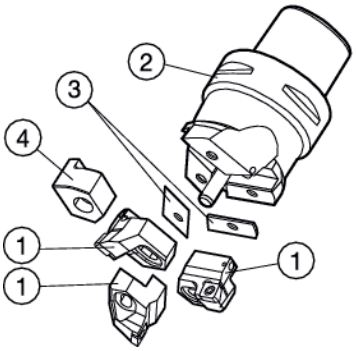

1. Slide
2. Adapter
3. Shim set[1]
4. Cover

Ordering example for a complete tool including adapter and slides:
3 piece R820A-AR11SCFC06A (slides)
1 piece C3-R820A-AA3037A (adapter)

Coromant Capto tightening torque:
Size C3: 40-50 Nm (30-37 lbf-ft)
Size C4: 50-60 Nm (37-44 lbf-ft)
Size C5: 90-100 Nm (67-74 lbf-ft)
Size C6: 160-180 Nm (118-133 lbf-ft)
Size C8: 160-180 Nm (118-133 lbf-ft)

CoroBore® 820

Boring tool with 3 inserts
Coromant Capto®

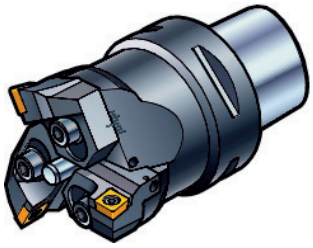

Productive boring

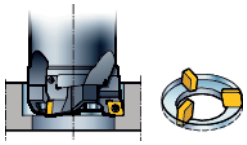

Step boring

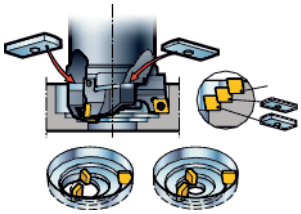

Single edge boring

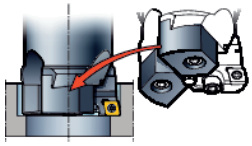

Boring range:	35-306 mm (1.378-12.047 inch)		0° slides should be used.	
Boring depth:	4 × D_{5m}	3 Slides 1 Adapter	3 Slides[3] 1 Shim set 1 Adapter	1 Slide 2 Cover 1 Adapter
Hole tolerance:	IT9			
Cutting fluid:	Internal			

Cutting speed, v_c max: 1200 m/min (3937 ft/min)

Boring range, mm (inch)					Insert type			1. Slide[3]	2. Adapter
D_c min – max	Adapter size	Coupling size	Entering angle	Lead angle	ISO	ANSI	*iC*	**Ordering code**	**Ordering code**
86-97	E	C6-C8	90°	0°	CC.. 12	CC.. 43	1/2	R820E-AR22SCFC12A	C6-R820E-AA3068A
(3.386-3.819)			84°	6°	SC.. 12	SC.. 43		R820E-AR22SSYC12A	C8-R820E-AA3072A
			95°	-5°	CC.. 12	CC.. 43		R820E-AR22SCLC12A	
96-107	E	C6-C8	90°	0°	SC.. 12	CC.. 43	1/2	R820E-BR22SCFC12A	
(3.780-4.213)			84°	6°	CC.. 06	SC.. 43		R820E-BR22SSYC12A	
			95°	-5°	CC.. 12	CC.. 43		R820E-BR22SCLC12A	
106-122	F	C8	90°	0°	CC.. 12	CC.. 43	1/2	R820F-AR24SCFC12A	C8-R820F-AA3076A
(4.173-4.803)			84°	6°	SC.. 12	SC.. 43		R820F-AR24SSYC12A	
			95°	-5°	CC.. 12	CC.. 43		R820F-AR24SCLC12A	
			90°	0°	CN.. 12	CN.. 43	1/2	R820F-AR24DCFN12A	
			84°	6°	SN.. 12	SN.. 43		R820F-AR24DSYN12A	
			95°	-5°	CN.. 12	CN.. 43		R820F-AR24DCLN12A	
121-137	F	C8	90°	0°	CC.. 12	CC.. 43	1/2	R820F-BR24SCFC12A	
(4.764-5.394)			84°	6°	SC.. 12	SC.. 43		R820F-BR24SSYC12A	
			95°	-5°	CC.. 12	CC.. 43		R820F-BR24SCLC12A	
			90°	0°	CN.. 12	CN.. 43	1/2	R820F-BR24DCFN12A	
			84°	6°	SN.. 12	SN.. 43		R820F-BR24DSYN12A	
			95°	-5°	CN.. 12	CN.. 43		R820F-BR24DCLN12A	
136-152	G	C8	90°	0°	CC.. 12	CC.. 43	1/2	R820G-AR24SCFC12A	C8-R820G-AA3076A
(5.354-5.984)			84°	6°	SC.. 12	SC.. 43		R820G-AR24SSYC12A	
			95°	-5°	CC.. 12	CC.. 43		R820G-AR24SCLC12A	
			90°	0°	CN.. 12	CN.. 43	1/2	R820G-AR24DCFN12A	
			84°	6°	SN.. 12	SN.. 43		R820G-AR24DSYN12A	
			95°	-5°	CN.. 12	CN.. 43		R820G-AR24DCLN12A	
151-167	G	C8	90°	0°	CC.. 12	CC.. 43	1/2	R820G-BR24SCFC12A	
(5.945-6.575)			84°	6°	SC.. 12	SC.. 43		R820G-BR24SSYC12A	
			95°	-5°	CC.. 12	CC.. 43		R820G-BR24SCLC12A	
			90°	0°	CN.. 12	CN.. 43	1/2	R820G-BR24DCFN12A	
			84°	6°	SN.. 12	SN.. 43		R820G-BR24DSYN12A	
			95°	-5°	CN.. 12	CN.. 43		R820G-BR24DCLN12A	
166-191	H	C8	90°	0°	CC..12	CC.. 43	1/2	R820H-AR26SCFC12A	C8-R820H-AA3089A
(6.535-7.520)			84°	6°	SC..12	SC.. 43		R820H-AR26SSYC12A	
			95°	-5°	CC..12	CC.. 43		R820H-AR26SCLC12A	
			90°	0°	CN..16	CN.. 54	5/8	R820H-AR36DCFN16A	C8-R820H-AA3089A
			84°	6°	SN..15	SN.. 54		R820H-AR36DSYN15A	
			95°	-5°	CN..16	CN.. 54		R820H-AR36DCLN16A	
189-214	H	C8	90°	0°	CC..12	CC.. 43	1/2	R820H-BR26SCFC12A	C8-R820H-AA3089A
(7.441-8.425)			84°	6°	SC..12	SC.. 43		R820H-BR26SSYC12A	
			95°	-5°	CC..12	CC.. 43		R820H-BR26SCLC12A	
			90°	0°	CN..16	CN.. 54	5/8	R820H-BR36DCFN16A	C8-R820H-AA3089A
			84°	6°	SN..15	SN.. 54		R820H-BR36DSYN15A	
			95°	-5°	CN..16	CN.. 54		R820H-BR36DCLN16A	

1) l_1 dimension when using shim set
2) Tightening torque for slide
3) Slides of type R820x-A... and R820x-B... with the same length can be combined for step boring over a larger diameter range.

F59

G6

F103
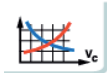
F90

F2

J2

Coromant Capto®

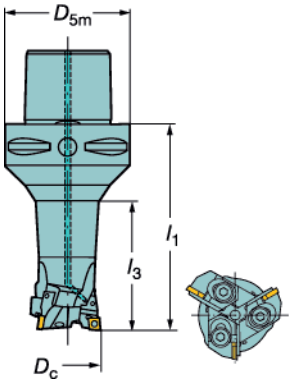

95° (-5°) CoroTurn® RC
R820x-xRxxDCLNxxA

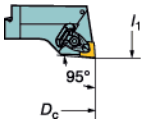

95° (-5°) CoroTurn® 107
R820x-xRxxSCLCxxA

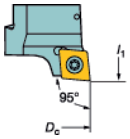

84° (6°) CoroTurn® 107
R820x-xRxxSSYCxxA

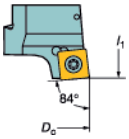

90° (0°) CoroTurn® RC
R820x-xRxxDCFNxxA

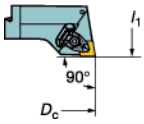

90° (0°) CoroTurn® 107
R820x-xRxxSCFCxxA

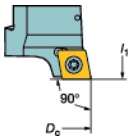

75° (15°) CoroTurn® 107
R820x-xRxxSCKCxxA

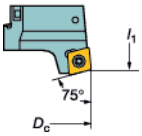

84° (6°) CoroTurn® RC
R820x-xRxxDSYNxxA

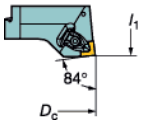

l_1 = programming length

Dimensions, mm (inch)							Accessories, must be ordered separately.		
							Shim set	Cover for CoroTurn® 107	Cover for CoroTurn® RC
Weight, kg (lbs)	D_{5m}	l_1	l_1 1)	l_3	Nm 2)	lbf-ft 2)			
2.3 (5.1)	63 (2.48)	90 (3.543)	91.6 (3.606)	-	38.0	28.0	R820E-AS00A	R820E-AC20A	-
3.4 (7.5)	80 (3.15)	94 (3.701)	95.6 (3.764)	-					
4.3 (9.5)	80 (3.15)	100 (3.937)	101.6 (4.000)	-	75.0	55.3	R820F-AS00A	R820F-AC22A	R820F-AC22A
5.1 (11.2)	80 (3.15)	100 (3.937)	101.6 (4.000)	-	75.0	55.3	R820G-AS00A	R820G-AC22A	R820G-AC22A
9.2 (20.3)	80 (3.15)	115 (4.528)	117 (4.606)	-	75.0	55.3	R820H-AS00A	R820H-BC24A	R820H-AC34A
8.1 (17.9)	80 (3.15)	125 (4.921)	127 (5.000)	-	120.0	88.5			
9.2 (20.3)	80 (3.15)	115 (4.528)	117 (4.606)	-	75.0	55.3			
8.1 (17.9)	80 (3.15)	125 (4.921)	127 (5.000)	-	120.0	88.5			

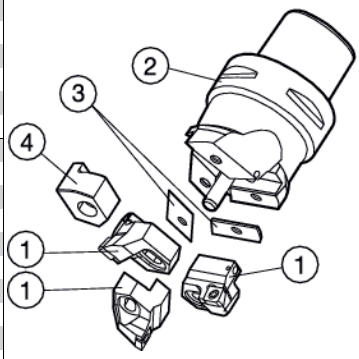

1. Slide
2. Adapter
3. Shim set 1)
4. Cover

Coromant Capto tightening torque:

Size C3: 40-50 Nm (30-37 lbf-ft)
Size C4: 50-60 Nm (37-44 lbf-ft)
Size C5: 90-100 Nm (67-74 lbf-ft)
Size C6: 160-180 Nm (118-133 lbf-ft)
Size C8: 160-180 Nm (118-133 lbf-ft)

Ordering example for a complete tool including adapter and slides:

3 pieces R820G-AR24SCFC12A (slides)
1 piece C8-R820G-AA3076A (adapter)

CoroBore® 820

Boring tool with 3 inserts
Coromant Capto®

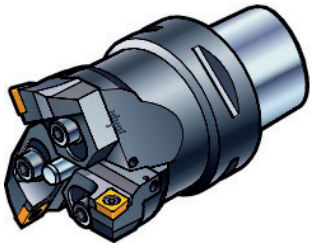

Productive boring

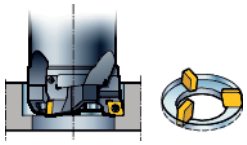

Step boring

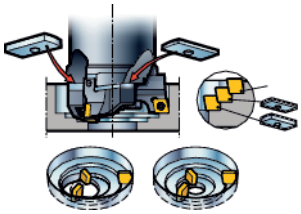

Single edge boring

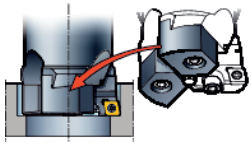

Boring range:	35-306 mm (1.378-12.047 inch)	3 Slides	0° slides should be used. 3 Slides[3]	1 Slide
Boring depth:	4 × D_{5m}	1 Adapter	1 Shim set	2 Cover
Hole tolerance:	IT9		1 Adapter	1 Adapter
Cutting fluid:	Internal			

Cutting speed, v_c max: 1200 m/min (3937 ft/min)

Boring range, mm (inch)					Insert type			1. Slide[3]	2. Adapter
D_c min – max	Adapter size	Coupling size	Entering angle	Lead angle	ISO	ANSI	*iC*	**Ordering code**	**Ordering code**
212-237	I	C8	90°	0°	CC..12	CC.. 43	1/2	R820I-AR26SCFC12A	C8-R820I-AA3089A
(8.346-9.331)			84°	6°	SC..12	SC.. 43		R820I-AR26SSYC12A	
			95°	-5°	CC..12	CC.. 43		R820I-AR26SCLC12A	
			90°	0°	CN..16	CN.. 54	5/8	R820I-AR36DCFN16A	C8-R820I-AA3089A
			84°	6°	SN..15	SN.. 54		R820I-AR36DSYN15A	
			95°	-5°	CN..16	CN.. 54		R820I-AR36DCLN16A	
235-260	I	C8	90°	0°	CC..12	CC.. 43	1/2	R820I-BR26SCFC12A	C8-R820I-AA3089A
(9.252-10.236)			84°	6°	SC..12	SC.. 43		R820I-BR26SSYC12A	
			95°	-5°	CC..12	CC.. 43		R820I-BR26SCLC12A	
			90°	0°	CN..16	CN.. 54	5/8	R820I-BR36DCFN16A	C8-R820I-AA3089A
			84°	6°	SN..15	SN.. 54		R820I-BR36DSYN15A	
			95°	-5°	CN..16	CN.. 54		R820I-BR36DCLN16A	
258-283	IX	C8	90°	0°	CC..12	CC.. 43	1/2	R820I-AR26SCFC12A	C8-R820IX-AA3094A
(10.157-11.142)			84°	6°	SC..12	SC.. 43		R820I-AR26SSYC12A	
			95°	-5°	CC..12	CC.. 43		R820I-AR26SCLC12A	
			90°	0°	CN..16	CN.. 54	5/8	R820I-AR36DCFN16A	C8-R820IX-AA3094A
			84°	6°	SN..15	SN.. 54		R820I-AR36DSYN15A	
			95°	-5°	CN..16	CN.. 54		R820I-AR36DCLN16A	
281-306	IX	C8	90°	0°	CC..12	CC.. 43	1/2	R820I-BR26SCFC12A	C8-R820IX-AA3094A
(11.063-12.047)			84°	6°	SC..12	SC.. 43		R820I-BR26SSYC12A	
			95°	-5°	CC..12	CC.. 43		R820I-BR26SCLC12A	
			90°	0°	CN..16	CN.. 54	5/8	R820I-BR36DCFN16A	C8-R820IX-AA3094A
			84°	6°	SN..15	SN.. 54		R820I-BR36DSYN15A	
			95°	-5°	CN..16	CN.. 54		R820I-BR36DCLN16A	

1) l_1 dimension when using shim set
2) Tightening torque for slide
3) Slides of type R820x-A... and R820x-B... with the same length can be combined for step boring over a larger diameter range.

F59
G6
F103
F90
F2
J2

SANDVIK Coromant

Coromant Capto®

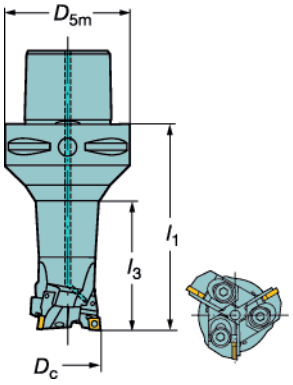

95° (-5°) CoroTurn® RC
R820x-xRxxDCLNxxA

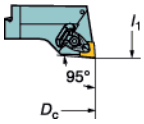

95° (-5°) CoroTurn® 107
R820x-xRxxSCLCxxA

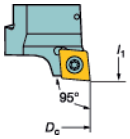

84° (6°) CoroTurn® 107
R820x-xRxxSSYCxxA

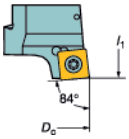

90° (0°) CoroTurn® RC
R820x-xRxxDCFNxxA

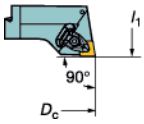

90° (0°) CoroTurn® 107
R820x-xRxxSCFCxxA

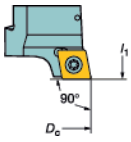

75° (15°) CoroTurn® 107
R820x-xRxxSCKCxxA

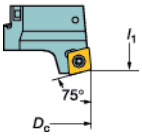

84° (6°) CoroTurn® RC
R820x-xRxxDSYNxxA

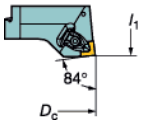

l_1 = programming length

Dimensions, mm (inch)							Accessories, must be ordered separately.		
							Shim set	Cover for CoroTurn® 107	Cover for CoroTurn® RC
Weight, kg (lbs)	D_{5m}	l_1	l_1[1]	l_3	Nm[2]	lbf-ft[2]			
9.7 (21.4)	80 (3.150)	115 (4.528)	117 (4.606)	-	75.0	55.3	R820I-AS00A	R820I-BC24A	R820I-AC34A
10.6 (23.4)	80 (3.150)	125 (4.921)	127 (5.000)	-	120.0	88.5			
9.7 (21.4)	80 (3.150)	115 (4.528)	117 (4.606)	-	75.0	55.3			
10.6 (23.4)	80 (3.150)	125 (4.921)	127 (5.000)	-	120.0	88.5			
11.0 (24.3)	80 (3.150)	120 (4.724)	122 (4.803)	-	75.0	55.3			
12.8 (28.2)	80 (3.150)	130 (5.118)	132 (5.197)	-	120.0	88.5			
11.0 (24.3)	80 (3.150)	120 (4.724)	122 (4.803)	-	75.0	55.3			
12.8 (28.2)	80 (3.150)	130 (5.118)	132 (5.197)	-	120.0	88.5			

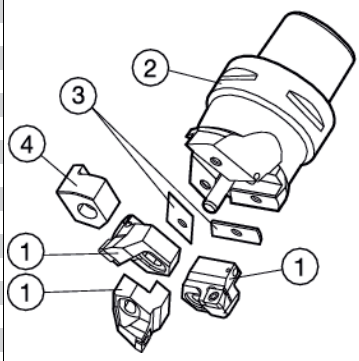

1. Slide
2. Adapter
3. Shim set[1]
4. Cover

Ordering example for a complete tool including adapter
3 pieces R820G-AR24SCFC12A (slides)
1 piece C8-R820G-AA3076A (adapter)

Accessories, must be ordered separately.

Adapter size	Shim set	Thickness	Cover for CoroTurn® 107 Screw clamping	Cover for CoroTurn® RC Rigid clamping
A	R820A-AS00A	0.5+1 mm (.020+.039 inch)	R820A-AC10A	-
B	R820B-AS00A	0.5+1 mm (.020+.039 inch)	R820B-AC11A	-
C	R820C-AS00A	0.5+1 mm (.020+.039 inch)	R820C-AC15A	-
D	R820D-AS00A	0.5+1 mm (.020+.039 inch)	R820D-AC17A	-
E	R820E-AS00A	0.8+1.6 mm (.031+.063 inch)	R820E-AC20A	-
F	R820F-AS00A	0.8+1.6 mm (.031+.063 inch)	R820F-AC22A	R820F-AC22A
G	R820G-AS00A	0.8+1.6 mm (.031+.063 inch)	R820G-AC22A	R820G-AC22A
H	R820H-AS00A	1+2 mm (.039+.079 inch)	R820H-BC24A	R820H-AC34A
I	R820I-AS00A	1+2 mm (.039+.079 inch)	R820I-BC24A	R820I-AC34A

Coromant Capto tightening torque:
Size C3: 40-50 Nm (30-37 lbf-ft)
Size C4: 50-60 Nm (37-44 lbf-ft)
Size C5: 90-100 Nm (67-74 lbf-ft)
Size C6: 160-180 Nm (118-133 lbf-ft)
Size C8: 160-180 Nm (118-133 lbf-ft)

CoroBore® 820 XL

Boring range 298 - 540 mm (11.732 - 21.260 inch)

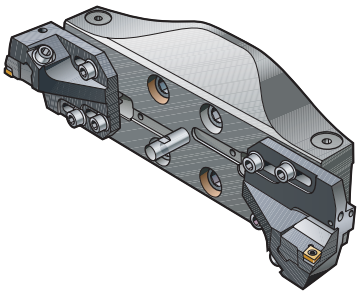

Twin edge boring

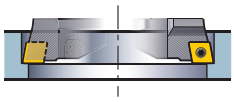

Step boring

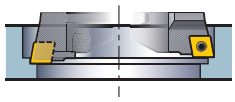

Single edge boring

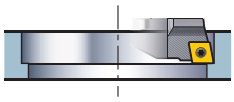

Cartridges with 90° entering angle (0° lead) should be used for step boring

Axially adjustable cartridges[2]

Boring range	298-540 mm (11.732-21.260 inch)
Hole tolerance	IT9
Cutting fluid	Internal
Cutting speed, v_c max:	1200 m/min (3937 ft/min)

Boring range D_c mm (inch) min-max	Bridge size	Entering angle κ_r	Lead angle	Insert type[1] ISO	ANSI	1. Cartridge[2] Ordering code	2. Slide Ordering code	3. Bridge Ordering code
298-380	M	90°	0°	CC...12	CC..43	S12-R820XLR40SCFC12	S24-R820XLS12-012	A40-RXLS24-AM2 062
(11.732-14.961)		90°	0°	TC…22	TC..43	S12-R820XLR40STFC22		
		84°	6°	SC…12	SC..43	S12-R820XLR40SSYC12		
		90°	0°	CN…19	CN..64	S12-R820XLR40DCFN19		
		84°	6°	SN…15	SN..54	S12-R820XLR40DSYN15		
378-460	N	90°	0°	CC...12	CC..43	S12-R820XLR40SCFC12	S24-R820XLS12-012	A40-RXLS24-AN2 067
(14.882-18.110)		90°	0°	TC…22	TC..43	S12-R820XLR40STFC22		
		84°	6°	SC…12	SC..43	S12-R820XLR40SSYC12		
		90°	0°	CN…19	CN..64	S12-R820XLR40DCFN19		
		84°	6°	SN…15	SN..54	S12-R820XLR40DSYN15		
458-540	O	90°	0°	CC...12	CC..43	S12-R820XLR40SCFC12	S24-R820XLS12-012	A40-RXLS24-AO2 072
(18.031-21.260)		90°	0°	TC…22	TC..43	S12-R820XLR40STFC22		
		84°	6°	SC…12	SC..43	S12-R820XLR40SSYC12		
		90°	0°	CN…19	CN..64	S12-R820XLR40DCFN19		
		84°	6°	SN…15	SN..54	S12-R820XLR40DSYN15		

1) Inserts are ordered separately.
2) Axially adjustable cartridges +1.5 mm (+.059"). To be used for step boring or securing same axial position on the two inserts.
3) L1 is increased up to 1.5 mm (.059") when step boring
4) The bridge's machine side interface matches the spindle nose on machines with taper size 50
5) Stop plate set for quick and easy change from finishing slide to roughing slide with retained slide position. If switching from roughing to finishing slide, the diameter needs to be reduced on the fine boring head, followed by a measurement cut.

Assembly with bridge sizes M, N and O

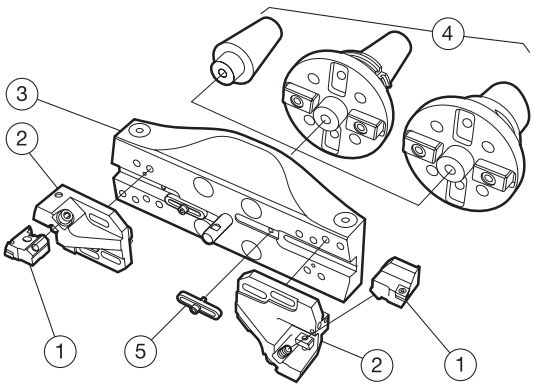

1. Cartridge
2. Slide
3. Bridge
4. Holders
5. Stop plate set

F59

F46

F103
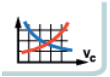
F90

F2

J2

Assembly with bridge sizes M, N and O

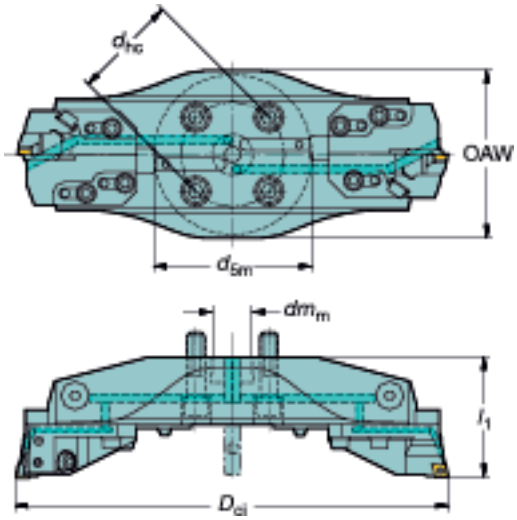

84° (6°) CoroTurn® 107
R820XL...SSYC

90° (0°) CoroTurn® 107
R820XL...SCFC

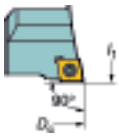

90° (0°) CoroTurn® 107
R820XL...STFC

90° (0°) CoroTurn® RC
R820XL...DCFN

84° (6°) CoroTurn® RC
R820XL...DSYN

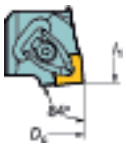

Dimensions, mm (inch)						4. Holders	5. Stop plate set[5]
Weight, kg (lbs)	l_1[3]	D_{5m}[4]	OAW	dm_m	d_{hc}	Ordering code	Ordering code
9.0 (19.84)	114	160	164	40	101.6	392.644XL-5040 075	5335 001-01
	(4.488)	(6.299)	(6.457)	(1.575)	(4.000)	392.646XL-5040 080	
						A392.645XL-5040 075	
						C8-391.XL-40 065	
						C10-391.XL-40 070	
10.8 (23.81)	119	160	164	40	101.6	392.647XL-5040	
	(4.685)	(6.299)	(6.457)	(1.575)	(4.000)	A392.647XL-5040	
						See page F46	
12.7 (28)	124	160	164	40	101.6		
	(4.882)	(6.299)	(6.457)	(1.575)	(4.000)		

Ordering example for a complete tool for diameter 11.732-14.961 inch (valid for bridge size M, N and O) including holder:

2 pieces S12-R820XLR40SCFC12 (cartridge)
2 pieces S24-R820XLS12-012 (slide)
1 piece A40-RXLS24-AM2 062 (bridge)
1 piece 392.644XL-5040 075 (holder)

Tightening torques

For bridge:	200	Nm	148	ft-lbs
For slide:	60	Nm	44	ft-lbs
For cartridge:	60	Nm	44	ft-lbs
For insert screw (CoroTurn 107):	3	Nm	2.2	ft-lbs
For insert clamping (CoroTurn RC):	6.4	Nm	4.7	ft-lbs

CoroBore® 820 XL

Boring range 538 - 1260 mm (21.181 - 49.606 inch)

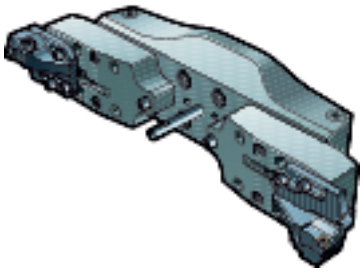

Twin edge boring

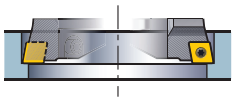

Step boring

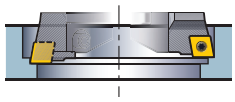

Single edge boring

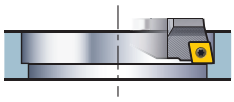

Cartridges with 90° entering angle (0° lead) should be used for step boring

Axially adjustable cartridges[2]

Boring range	538-1260 mm (21.181-49.606 inch)
Hole tolerance	IT9
Cutting fluid	Internal
Cutting speed, v_c max: 1200 m/min (3937 ft/min)	

Bridge sizes Q and R are recommended for semi-finishing with single edge boring and positive inserts

Boring range D_c mm (inch) min-max	Bridge size	Entering angle κ_r	Lead angle	Insert type[1] ISO	ANSI	1. Cartridge[2] Ordering code	2. Slide Ordering code	3. Bridge Ordering code
538-780	P	90°	0°	CC...12	CC..43	S12-R820XLR40SCFC12	S24-R820XLS12-012	A40-NXLA35-AP2 086
(21.181-30.709)		90°	0°	TC…22	TC..43	S12-R820XLR40STFC22		
		84°	6°	SC…12	SC..43	S12-R820XLR40SSYC12		
		90°	0°	CN…19	CN..64	S12-R820XLR40DCFN19		
		84°	6°	SN…15	SN..54	S12-R820XLR40DSYN15		
778-1020	Q	90°	0°	CC...12	CC..43	S12-R820XLR40SCFC12	S24-R820XLS12-012	A40-NXLA35-AQ2 106
(30.630-40.157)		90°	0°	TC…22	TC..43	S12-R820XLR40STFC22		
		84°	6°	SC…12	SC..43	S12-R820XLR40SSYC12		
		90°	0°	CN…19	CN..64	S12-R820XLR40DCFN19		
		84°	6°	SN…15	SN..54	S12-R820XLR40DSYN15		
1018-1260	R	90°	0°	CC...12	CC..43	S12-R820XLR40SCFC12	S24-R820XLS12-012	A40-NXLA35-AR2 106
(40.079-49.606)		90°	0°	TC…22	TC..43	S12-R820XLR40STFC22		
		84°	6°	SC…12	SC..43	S12-R820XLR40SSYC12		
		90°	0°	CN…19	CN..64	S12-R820XLR40DCFN19		
		84°	6°	SN…15	SN..54	S12-R820XLR40DSYN15		

1) Inserts are ordered separately.
2) Axially adjustable cartridges +1.5 mm (+.059"). To be used for step boring or securing same axial position on the two inserts.
3) L1 is increased up to 1.5 mm (.059") when step boring
4) The bridge's machine side interface matches the spindle nose on machines with taper size 50
5) Stop plate set for quick and easy change from finishing slide to roughing slide with retained slide position. If switching from roughing to finishing slide, the diameter needs to be reduced on the fine boring head, followed by a measurement cut.

Assembly with bridge sizes P, Q and R

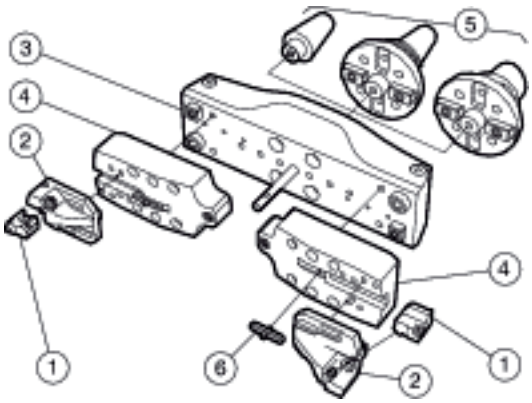

1. Cartridge
2. Slide
3. Bridge
4. Bridge extension
5. Holders
6. Stop plate set

F59 F46 F103 F90 F2 J2

SANDVIK Coromant

Assembly with bridge sizes P, Q and R

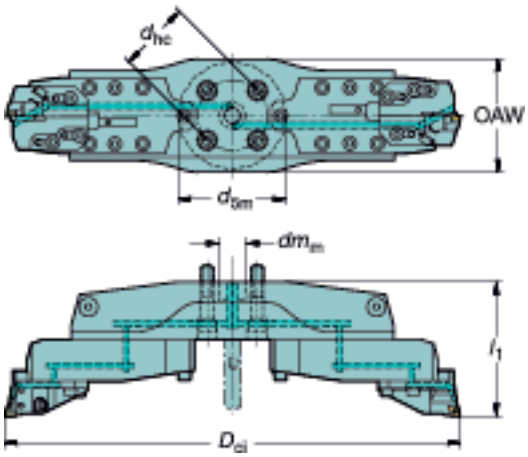

84° (6°) CoroTurn® 107
R820XL...SSYC

90° (0°) CoroTurn® 107
R820XL...SCFC

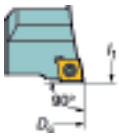

90° (0°) CoroTurn® 107
R820XL...STFC

90° (0°) CoroTurn® RC
R820XL...DCFN

84° (6°) CoroTurn® RC
R820XL...DSYN

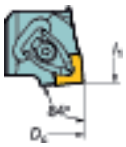

4. Bridge extension	Dimensions, mm (inch)						5. Holders	6. Stop plate set[5]
Ordering code	kg	l_1[3]	D_{5m}[4]	OAW	dm_m	d_{hc}	Ordering code	Ordering code
A35-RXLS24-A 060	25.2	198	160	164	40	101.6	392.644XL-5040 075	5335 001-01
		(7.795)	(6.299)	(6.457)	(1.575)	(4.000)	392.644XL-5040 075	
							A392.645XL-5040 075	
							C10-391.XL-40 070	
							392.647XL-5040	
A35-RXLS24-A 060	36.3	218	160	164	40	101.6	A392.647XL-5040	
		(8.583)	(6.299)	(6.457)	(1.575)	(4.000)	See page F46.	
A35-RXLS24-A 060	43.5	218	160	164	40	101.6		
		(8.583)	(6.299)	(6.457)	(1.575)	(4.000)		

Ordering example for a complete tool for diameter 211.18-30.709 inch (valid for bridge sizes P, Q and R) including holder:

2 pieces S12-R820XLR40SCFC12 (cartridge)
2 pieces S24-R820XLS12-012 (slide)
1 piece A40-NXLA35-AP2 086 (bridge)
2 pieces A35-RXLS24-A 060 (bridge extension)
1 piece 392.644XL-5040 075 (holder)

Tightening torques

For bridge:	200	Nm	148	ft-lbs
For slide:	60	Nm	44	ft-lbs
For cartridge:	60	Nm	44	ft-lbs
For insert screw (CoroTurn 107):	3	Nm	2.2	ft-lbs
For insert clamping (CoroTurn RC):	6.4	Nm	4.7	ft-lbs
For bridge extension:	100	Nm	74	ft-lbs

Two clamping systems

RC-clamping
for T-MAX P inserts

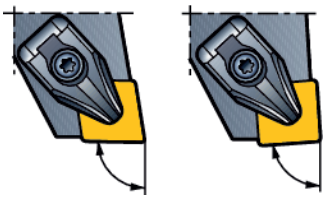

Screw clamping
for CoroTurn inserts

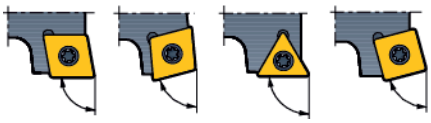

Entering angle	91°	84°		Entering angle	90°	75°	90°	75°
Lead angle	-1°	6°		Lead angle	0°	15°	0°	15°

Rigid clamping system CoroTurn® RC

- the top performer in high speed cast iron machining

Stable clamping is essential if the dramatic metal cutting potential of ceramic inserts is to be fully utilized.

Sandvik Coromant offers the successful concept of Rigid Clamping (RC) for ceramics. The RC system brings safe and secure clamping to flat and holed ceramic inserts and is recommended particularly for materials and operations involving large and varying cutting forces.

The RC holders with carbide pressure plates have good chip steering properties and reduce erosion in high speed applications.

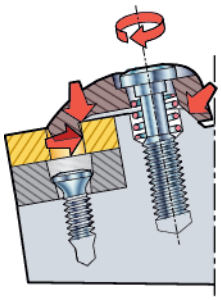

Standard RC clamp

Delivered with slide.

To be used with standard T-Max P carbide inserts with hole.

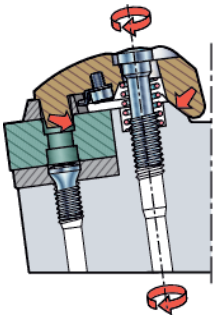

-2 type RC clamp

To be ordered separately.

To be used with ceramic inserts with hole, CNGQ, CNGA, CNMA.

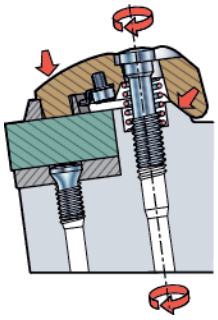

-4 type RC clamp

To be ordered separately.

To be used with ceramic inserts without hole, CNG.

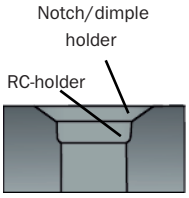

Inserts with Q-style

The combination of inserts with Q-style holes and RC slides essentially improves tool performance. A Q-style hole in the insert eliminates the risk of insert movement.

Duobore®

Rough boring tool - two insert design

Optimal productivity in low power machine tools

Short, rigid and compact
- Maximum stability

Cutting fluid through the tool
- Good chip evacuation

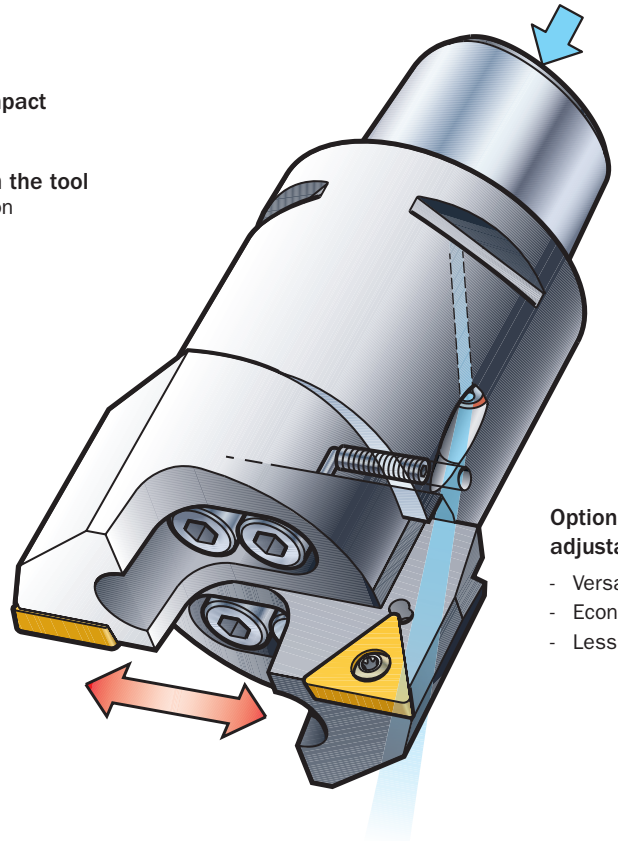

Optional slide assemblies, individually adjustable axially and radially
- Versatility
- Economy
- Less inventory

Single edge boring

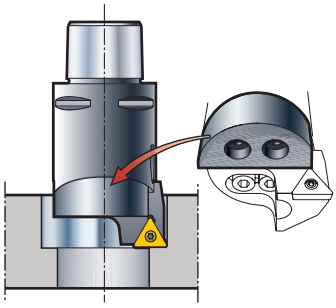

Twin edge boring

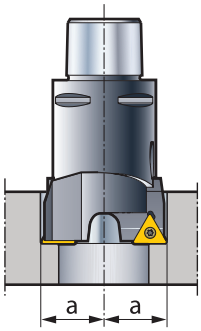

Step boring

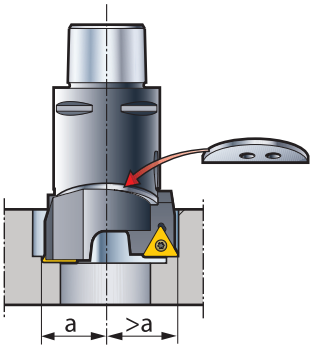

CoroTurn® RC rigid clamping
- First choice for diameters 69-150 mm (2.717-5.906 inch)

CoroTurn® 107 screw clamping
- Wide choice of insert types

ISO application areas:

P M K N S H

Duobore®

Boring tool 391.68A with 2 inserts

Coromant Capto®

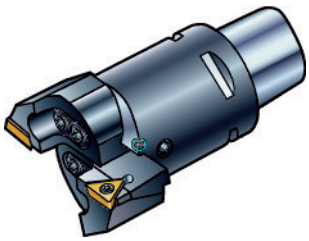

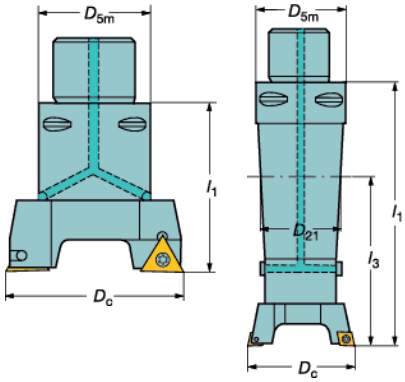

CoroTurn® 107
391.68A 90° (0°)
391.68F

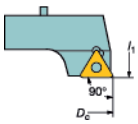

CoroTurn® RC
391.68F 90° (0°)

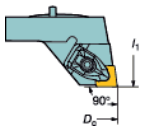

391.68B 75° (15°)

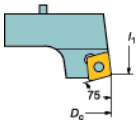

391.68D 84° (6°)

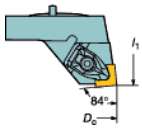

l_1 = programming length

Boring range: 25-150 mm (.984-5.906 inch)
Boring depth: 4 x D_{5m}
Hole tolerance: IT9
Cutting fluid: Internal
Application area: Rough boring

Boring range mm (inch) D_c min – max	Coupling size	Entering angle κ_r	Lead angle	Insert type[1] ISO	ANSI	*iC*	1. Slide Ordering code	4. Adapter Ordering code
25–32	C3	90°	0°	CC…06	CC...2(1.5)	1/4	391.68A-1-032 13 C06 B	C3-391.68A-1-021 068 B
(.984-1.260)		75°	15°	CC…06	CC...2(1.5)	1/4	391.68B-1-032 13 C06 B	
30–38	C3	90°	0°	CC…06	CC...2(1.5)	1/4	391.68A-2-038 13 C06 B	C3-391.68A-2-026 084 B
(1.181-1.496)		75°	15°	CC…06	CC...2(1.5)	1/4	391.68B-2-038 13 C06 B	
37–47	C3	90°	0°	TC...1103	TC...22	1/4	391.68F-3-047 16 TC11 B	C3-391.68A-3-032 034 B
(1.457-1.850)		75°	15°	CC…06	CC...2(1.5)	1/4	391.68B-3-047 16 C06 B	
46–56	C4	90°	0°	TC…16	TC...3(2.5)	3/8	391.68A-4-056 24 T16 B	C4-391.68A-4-040 041 B
(1.811-2.205)		75°	15°	SC…09	SC...3(2.5)	3/8	391.68B-4-056 24 S09 B	
55–70	C5	90°	0°	TC…16	TC...3(2.5)	3/8	391.68A-5-070 26 T16 B	C5-391.68A-5-050 044 B
(2.165-2.756)		75°	15°	SC…09	SC...3(2.5)	3/8	391.68B-5-070 26 S09 B	
69–84	C5/C6	90°	0°	TC…16	TC...3(2.5)	3/8	391.68A-6-084 30 T16 B	C5-391.68A-6-063 045 C
(2.717-3.307)		75°	15°	SC...12	SC...43	1/2	391.68B-6-084 30 S12 B	C6-391.68A-6-063 045 C
		90°	0°	CN...12	CN...43	1/2	391.68F-6-084 36 C12 B	C5-391.68A-6-063 045 C
		84°	6°	SN...12	SN...43	1/2	391.68D-6-084 36 S12 B	C6-391.68A-6-063 045 C
83–101	C5/C6	90°	0°	TC…16	TC...3(2.5)	3/8	391.68A-6-101 30 T16 B	C5-391.68A-6-063 045 C
(3.268-3.976)								C6-391.68A-6-063 045 C
		90°	0°	TC…22	TC...43	1/2	391.68A-6-101 41 T22 B	C5-391.68A-6-063 045 C
		75°	15°	SC…12	SC...43	1/2	391.68B-6-101 41 S12 B	C6-391.68A-6-063 045 C
		90°	0°	CN...12	CN...43	1/2	391.68F-6-101 36 C12 B	C5-391.68A-6-063 045 C
		84°	6°	SN...12	SN...43	1/2	391.68D-6-101 36 S12 B	C6-391.68A-6-063 045 C
99–125	C8	90°	0°	TC…16	TC...3(2.5)	3/8	391.68A-7-125 40 T16 B	C8-391.68A-7-080 060 D
(3.898-4.921)		90°	0°	TC…22	TC...43	1/2	391.68A-7-125 40 T22 B	
		75°	15°	SC…12	SC...43	1/2	391.68B-7-125 40 S12 B	
		90°	0°	CN...12	CN...43	1/2	391.68F-7-125 40 C12 B	C8-391.68A-7-080 060 D
		90°	0°	CN...16	CN...54	5/8	391.68F-7-125 40 C16 B	
		84°	6°	SN...12	SN...43	1/2	391.68D-7-125 40 S12 B	C8-391.68A-7-080 060 D
		84°	6°	SN...15	SN...54	5/8	391.68D-7-125 44 S15 B	
123–150	C8	90°	0°	TC…16	TC...3(2.5)	3/8	391.68A-7-150 40 T16 B	C8-391.68A-7-080 060 D
(4.843-5.906)		90°	0°	TC…22	TC...43	1/2	391.68A-7-150 40 T22 B	
		75°	15°	SC…12	SC...43	1/2	391.68B-7-150 40 S12 B	
		90°	0°	CN...12	CN...43	1/2	391.68F-7-150 40 C12 B	C8-391.68A-7-080 060 D
		90°	0°	CN...16	CN...54	5/8	391.68F-7-150 40 C16 B	
		84°	6°	SN...12	SN...43	1/2	391.68D-7-150 40 S12 B	
		84°	6°	SN...15	SN...54	5/8	391.68D-7-150 44 S15 B	C8-391.68A-7-080 060 D

1) Inserts are ordered separately.
2) When step boring, the l_1 dimension increases by 0.5 mm (.020 inch) or 1 mm (.039 inch).
3) Tightening torque for CoroTurn® 107 slide
4) Tightening torque for CoroTurn® RC slide

Coromant Capto tightening torque:
Size C3: 40-50 Nm (30-37 lbf-ft)
Size C4: 50-60 Nm (37-44 lbf-ft)
Size C5: 90-100 Nm (67-74 lbf-ft)
Size C6-C8: 160-180 Nm (118-133 ft-lbs)

F59

G6

F108
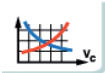
F90

F2

J2

SANDVIK Coromant

Twin edge boring

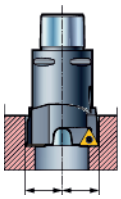

2 Slides
1 Adapter

Step boring

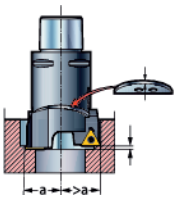

0° slides should be used.

2 Slides
1 Shim
1 Adapter

Single edge boring

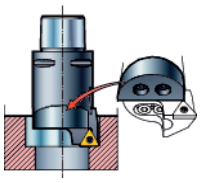

1 Slide
1 Cover
1 Adapter

Weight, kg (lbs)	D_{5m}	D_{21}	l_1 [2]	l_3	Nm	ft-lbs	2. Shim (mm)	3. Cover
0.3 (.7)	32 (1.260)	24 (0.945)	81 (3.189)	47 (1.850)	4.8 [3]	3.5 [3]	5549 125-01 (0.5)	5623 010-01
0.5 (1.1)	32 (1.260)	29 (1.142)	97 (3.819)	62 (2.441)			5549 125-02 (0.5)	5623 010-02
0.3 (.7)	32 (1.260)	–	50 (1.969)	–			5549 125-03 (0.5)	5623 010-03A
0.6 (1.3)	40 (1.575)	–	65 (2.559)	–	9.0 [3]	6.6 [3]	5549 125-04 (0.5)	5623 010-04
0.9 (2.0)	50 (1.969)	–	70 (2.756)	–	16.0 [3]	11.8 [3]	5549 125-05 (1.0)	5623 010-05A
1.4 (3.1)	50 (1.969)	–	75 (2.953)	–	16.0 [3]	11.8 [3]	5549 125-06A (1.0)	5623 010-06B
1.5 (3.3)	63 (2.480)	–	75 (2.953)	–				
1.5 (3.3)	50 (1.969)	–	81 (3.189)	–	75.0 [4]	55.0 [4]	5549 125-06A (1.0)	5623 010-06B
1.6 (3.5)	63 (2.480)	–	81 (3.189)	–				
1.6 (3.5)	50 (1.969)	–	75 (2.953)	–	16.0 [3]	11.8 [3]	5549 125-06A (1.0)	5623 010-06B
1.7 (3.7)	63 (2.480)	–	75 (2.953)	–				
1.6 (3.5)	50 (1.969)	–	86 (3.386)	–	16.0 [3]	11.8 [3]	5549 125-06A (1.0)	5623 010-06B
1.7 (3.7)	63 (2.480)	–	86 (3.386)	–				
1.6 (3.5)	50 (1.969)	–	81 (3.189)	–	75.0 [4]	55.0 [4]	5549 125-06A (1.0)	5623 010-06B
1.7 (3.7)	63 (2.480)	–	81 (3.189)	–				
4.0 (8.8)	80 (3.150)	–	100 (3.937)	–	38.0 [3]	28.0 [3]	5549 125-08 (1.0)	5623 010-07A
4.3 (9.5)	80 (3.150)	–	100 (3.937)	–	120.0 [4]	88.5 [4]	5549 125-08 (1.0)	5623 010-07A
4.3 (9.5)	80 (3.150)	–	104 (4.094)	–			5549 125-08 (1.0)	5623 010-07A
4.1 (9.0)	80 (3.150)	–	100 (3.937)	–	38.0 [3]	28.0 [3]	5549 125-08 (1.0)	5623 010-07A
4.7 (10.4)	80 (3.150)	–	100 (3.937)	–	120.0 [4]	88.5 [4]	5549 125-08 (1.0)	5623 010-07A
4.7 (10.4)	80 (3.150)	–	104 (4.094)	–			5549 125-08 (1.0)	5623 010-07A

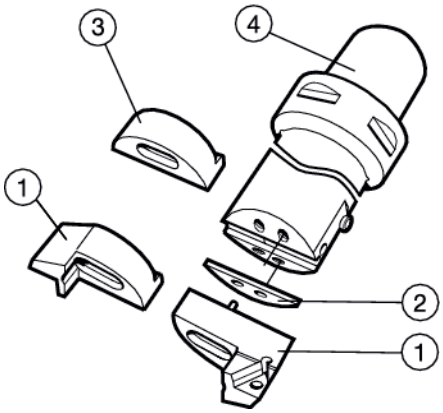

1. Slides
2. Shim
3. Cover
4. Adapter

Ordering example for a complete tool including adapter and slides:
2 pieces 391.68A-1-032-13 C06 B (slides)
1 piece C3-391.68A-1-021 068 A (adapter)

Coromant Capto®

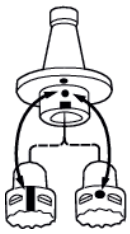

Assembly

Note!
When assembling, make sure that the marks are in line.

Duobore®

Boring tool 391.68A with 2 inserts

Coromant Capto®

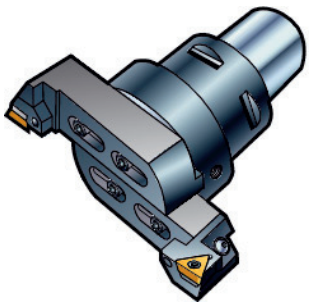

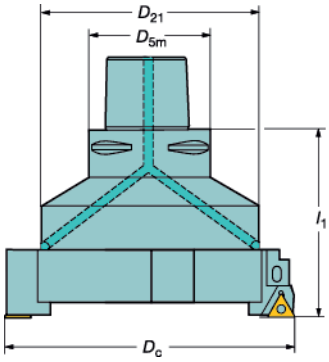

CoroTurn® 107

391.68B 75° (15°) 391.68A 90° (0°)

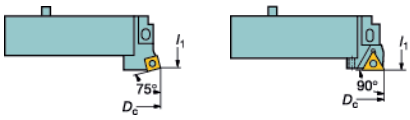

Boring range:	148-270 mm (5.827-10.630 inch)
Boring depth:	4 x D_{5m}
Hole tolerance:	IT9
Cutting fluid:	Internal
Application area:	Rough boring

l_1 = programming length

Boring range mm (inch) D_c min – max	Coupling size	Entering angle κ_r	Lead angle	Insert type[1] ISO	ANSI	iC	1. Cartridge[2) 4)] Ordering code	2. Extension slide Ordering code	4. Adapter Ordering code
148–190	C8	90°	0°	TC…16	TC...3(2.5)	3/8	391.68A-8-T16 A	**391.68X-8-190 45 B**	**C8-391.68A-8-110 080 C**
(5.827-7.480)		90°	0°	TC…22	TC...43	1/2	391.68A-8-T22 A		
		75°	15°	SC…12	SC...43	1/2	391.68B-8-S12 A		
188–230	C8	90°	0°	TC…16	TC...3(2.5)	3/8	391.68A-8-T16 A	**391.68X-8-230 45 B**	**C8-391.68A-8-110 080 C**
(7.402-9.055)		90°	0°	TC…22	TC...43	1/2	391.68A-8-T22 A		
		75°	15°	SC…12	SC...43	1/2	391.68B-8-S12 A		
228–270	C8	90°	0°	TC…16	TC...3(2.5)	3/8	391.68A-8-T16 A	**391.68X-8-270 45 B**	**C8-391.68A-8-110 080 C**
(8.976-10.630)		90°	0°	TC…22	TC...43	1/2	391.68A-8-T22 A		
		75°	15°	SC…12	SC...43	1/2	391.68B-8-S12 A		

1) Inserts are ordered separately.
2) Axially adjustable cartridges. Can be used for step boring.
3) Tightening torque for extension slide
4) Tightening torque for cartridge = 28.0 lbf-ft (38 Nm)

Coromant Capto tightening torque:
Size C3: 40-50 Nm (30-37 lbf-ft)
Size C4: 50-60 Nm (37-44 lbf-ft)
Size C5: 90-100 Nm (67-74 lbf-ft)
Size C6-C8: 160-180 Nm (118-133 ft-lbs)

F59

G6

F108

F90

F2

J2

SANDVIK Coromant

Twin edge boring

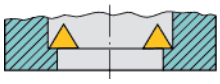

2 Cartridges
2 Extension slides
1 Adapter

Step boring

0° cartridges should be used.

2 Cartridges
2 Extension slides
1 Adapter

Single edge boring

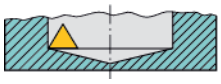

1 Cartridge
1 Extension slide
1 Cover
1 Adapter

Weight, kg (lbs)	D_{5m}	D_{21}	l_1	Nm[3]	ft-lbs[3]	3. Cover
9.0 (19.8)	80 (3.150)	143 (5.630)	125 (4.921)	75	55.3	5623 010-08 A
9.5 (20.9)	80 (3.150)	143 (5.630)	125 (4.921)			5623 010-08 A
10.0 (22.0)	80 (3.150)	143 (5.630)	125 (4.921)			5623 010-08 A

1. Cartridge
2. Extension slide
3. Cover
4. Adapter

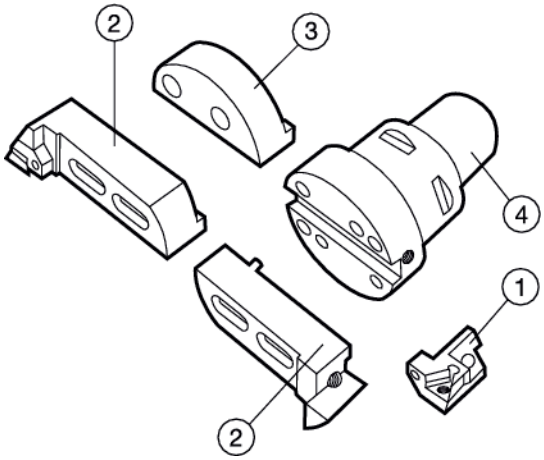

Ordering example for a complete tool including adapter and slides:
2 pieces 391.68A-8-T16 A (cartridges)
2 pieces 391.68X-8-190 45 A (Extension slides)
1 piece C8-391.68A-8-110 080 C (adapter)

Coromant Capto®

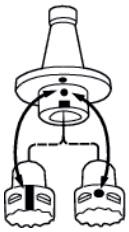

Assembly

Note!
When assembling, make sure that the marks are in line.

Duobore®

Dampened boring tool 391.69A with 2 inserts

Coromant Capto®

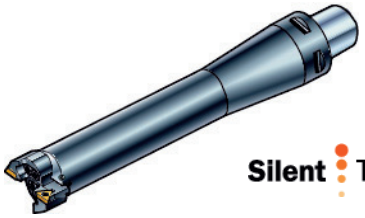

Silent Tools®

Boring range:	25-101 mm (.984-3.976 inch)
Boring depth:	6 x D_{5m}
Hole tolerance:	IT9
Cutting fluid:	Internal
Application area:	Rough boring
Max rotation speed:	6000 rpm

Design 1

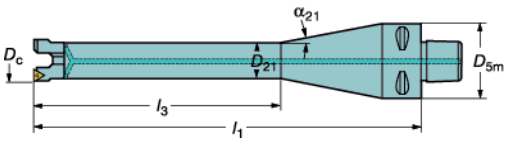

Design 2

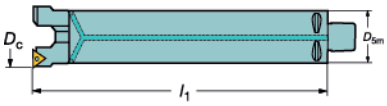

CoroTurn® 107

391.68A 90°(0°) 391.68A 90°(0°)

391.68F

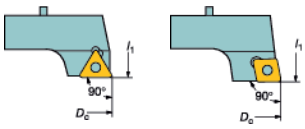

391.68B 75°(15°) 391.68B 75°(15°)

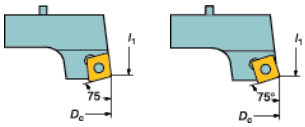

l_1 = programming length

Boring range mm (inch) D_c min – max	Coupling size	Entering angle κ_r	Lead angle	Insert type[1] ISO	ANSI	iC	1. Slide Ordering code	4. Adapter Ordering code	Design
25–32	C3	90°	0°	CC…06	CC...2(1.5)	1/4	391.68A-1-032 13 C06 B	C3-391.69A-1-022 200 A	1
(.984–1.260)		75°	15°	CC…06	CC...2(1.5)	1/4	391.68B-1-032 13 C06 B		
30–38		90°	0°	CC…06	CC...2(1.5)	1/4	391.68A-2-038 13 C06 B	C3-391.69A-2-026 211 A	1
(1.181–1.496)		75°	15°	CC…06	CC...2(1.5)	1/4	391.68B-2-038 13 C06 B		
37–47	C4	90°	0°	TC...1103	TC...22	1/4	391.68F-3-047 16 TC11 B	C4-391.69A-3-032 262 A	1
(1.457–1.850)		75°	15°	CC…06	CC...2(1.5)	1/4	391.68B-3-047 16 C06 B		
46–56	C5	90°	0°	TC…16	TC...3(2.5)	3/8	391.68A-4-056 24 T16 B	C5-391.69A-4-040 308 A	1
(1.811–2.205)		75°	15°	SC…09	SC...3(2.5)	3/8	391.68B-4-056 24 S09 B		
55–70		90°	0°	TC…16	TC...3(2.5)	3/8	391.68A-5-070 26 T16 B	C5-391.69A-5-050 280 A	2
(2.165–2.756)		75°	15°	SC…09	SC...3(2.5)	3/8	391.68B-5-070 26 S09 B		
69–84	C6	90°	0°	TC…16	TC...3(2.5)	3/8	391.68A-6-084 30 T16 B	C6-391.69A-6-063 367 A	2
(2.717–3.307)		75°	15°	SC…12	SC...43	1/2	391.68B-6-084 30 S12 B		
83–101		90°	0°	TC...16	TC...3(2.5)	3/8	391.68A-6-101 30 T16 B	C6-391.69A-6-063 367 A	2
(3.268–3.976)		90°	0°	TC....22	TC...43	1/2	391.68A-6-101 41 T22 B	C6-391.69A-6-063 367 A	2
		75°	15°	SC...12	SC...43	1/2	391.68B-6-101 41 S12 B		

1) Inserts are ordered separately.
2) When step boring, the l_1 dimension increases by 0.5 mm (.020 inch) or 1 mm (.039 inch).
3) Tightening torque for slide

Max. recommended depth of cut due to chip volume created during the cutting process.

Boring range, mm (inch)	Radial depth of cut, mm (inch) Twin edge and step boring per edge
25.0 - 27.5 (.984 - 1.083)	1.5 (.059)
27.6 - 32.0 (1.084 - 1.260)	2.5 (.098)
32.1 - 33.5 (1.261 - 1.319)	2.0 (.079)
33.6 - 38.0 (1.320 - 1.496)	2.5 (.098)
37.0 - 39.5 (1.497 - 1.555)	2.0 (.079)
39.6 - 47.0 (1.556 - 1.850)	2.5 (.098)
46.0 - 48.5 (1.851 - 1.909)	3.0 (.118)
48.5 - 101.0 (1.910 - 3.976)	Half of the cutting edge length.
99.0 - 125.0 (3.898 - 4.921)	Half of the cutting edge length.
123.0 - 150.0 (4.843 - 5.906)	Half of the cutting edge length.

F59 G6 F108 F90 F2 J2

SANDVIK Coromant

Twin edge boring

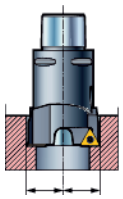

2 Slides
1 Adapter

Step boring

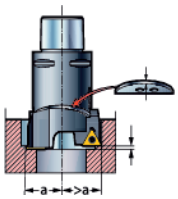

0° slides should be used.

2 Slides
1 Shim
1 Adapter

Single edge boring

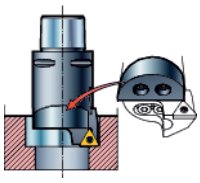

1 Slide
1 Cover
1 Adapter

Dimensions, mm (inch)									
Weight	D_{5m}	D_{21}	l_1 2)	l_3	α_{21}°	Nm 3)	ft-lbs 3)	2. Shim (mm)	3. Cover
0.7	32	22	213	138	4.8	4.8	3.5	5549 125-01 (0.5)	5623 010-01
(1.5)	(1.260)	(.866)	(8.386)	(5.433)					
1.0	32	26	224	162	4.8			5549 125-02 (0.5)	5623 010-02
(2.2)	(1.260)	(1.024)	(8.819)	(6.378)					
1.9	40	32	278	198	4.8			5549 125-03 (0.5)	5623 010-03A
(4.2)	(1.575)	(1.260)	(10.945)	(7.795)					
3.0	50	40	332	246	4.8	9.0	6.6	5549 125-04 (0.5)	5623 010-04
(6.6)	(1.969)	(1.575)	(13.071)	(9.685)					
4.1	50	-	306	-	-	16.0	11.8	5549 125-05 (1.0)	5623 010-05A
(9.0)	(1.969)		(12.047)						
9.1	63	-	397	-	-			5549 125-06A (1.0)	5623 010-06B
(20.1)	(2.480)		(15.630)						
9.1	63	-	397	-	-			5549 125-06A (1.0)	5623 010-06B
(20.1)	(2.480)		(15.630)						
9.1	63	-	408	-	-			5549 125-06A (1.0)	5623 010-06B
(20.1)	(2.480)		(16.063)						

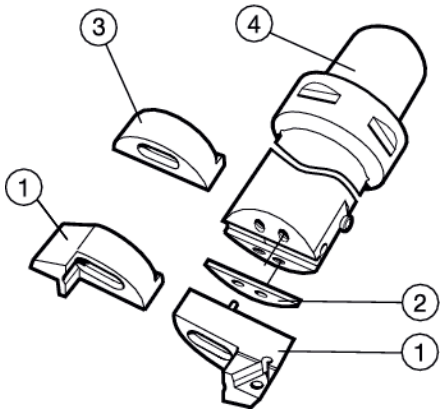

1. Slide
2. Shim
3. Cover
4. Adapter

Ordering example for a complete tool including adapter and slides:
2 pieces 391.68A-1-032-13 C06 B (slides)
1 piece C3-391.69A-1-022 200 A (adapter)

Coromant Capto®

Assembly

Note!
When assembling, make sure that the marks are in line.

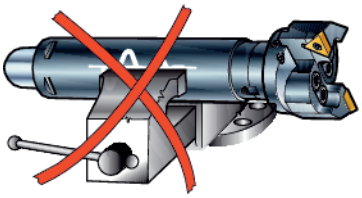

For proper assembly fixtures, see information in Metal cutting technical guide

Coromant Capto tightening torque:
Size C3: 40-50 Nm (30-37 lbf-ft)
Size C4: 50-60 Nm (37-44 lbf-ft)
Size C5: 90-100 Nm (67-74 lbf-ft)
Size C6: 160-180 Nm (118-133 lbf-ft)

Duobore®

Dampened boring tool with 2 inserts

Coromant Capto®

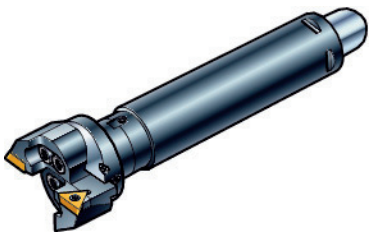

Silent Tools®

Boring range	99-150 mm (3.898-5.906 inch)
Boring depth:	600-700 mm (23.622-27.559 inch)
Hole tolerance:	IT9
Cutting fluid:	Internal
Application area:	Rough boring
Max. rotation speed:	6000 rpm

Coromant Capto®
C8-391.06

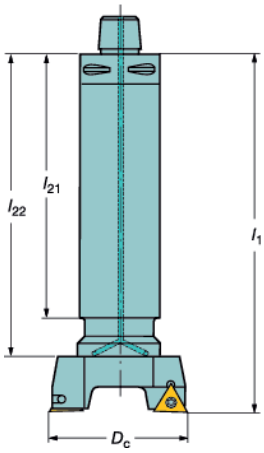

391.68A 90° (0°)

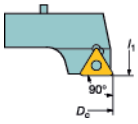

391.68B 75° (15°)

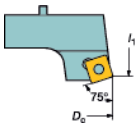

l_1 = programming length

Boring range mm (inch) D_c min – max	Coupling size	Entering angle	Lead angle	Insert type[1] ISO	ANSI	iC	1. Slide Ordering code	4. Arbor adapter Ordering code	5. Dampened milling adapter Ordering code
99–125	C8	90°	0°	TC…16	TC...3(2.5)	3/8	391.68A-7-125 40 T16 B	393.69A-7-32 060 A	C8-391.06-32 320
(3.898–4.921)		90°	0°	TC…22	TC...43	1/2	391.68A-7-125 40 T22 B		
		75°	15°	SC…12	SC...43	1/2	391.68B-7-125 40 S12 B		
123–150	C8	90°	0°	TC…16	TC...3(2.5)	3/8	391.68A-7-150 40 T16 B	393.69A-7-32 060 A	C8-391.06-32 320
(4.843–5.906)		90°	0°	TC…22	TC...43	1/2	391.68A-7-150 40 T22 B		
		75°	15°	SC…12	SC...43	1/2	391.68B-7-150 40 S12 B		

1) Inserts are ordered separately.
2) When step boring, the l_1 dimension increases by .0394 inch.
3) Tightening torque for slide

Coromant Capto tightening torque:
Size C8: 160-180 Nm (118-133 lbf-ft)

F59

G6

F108
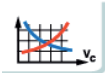
F90

F2

J2

SANDVIK Coromant

Twin edge boring

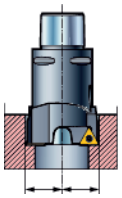

2 Slides
1 Milling adapter
1 Arbor adapter

Step boring

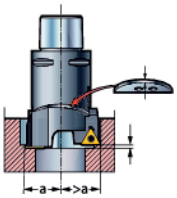

0° slides should be used.

2 Slides
1 Shim
1 Arbor adapter
1 Milling adapter

Single edge boring

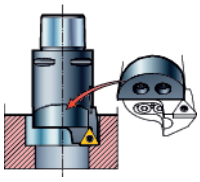

1 Slide
1 Cover
1 Arbor adapter
1 Milling adapter

Dimensions, mm (inch)							
Weight	l_1 2)	l_{21}	l_{22}	Nm 3)	ft-lbs 3)	2. Shim (mm)	3. Cover
33.9	420	320	380	38.0	28.0	5549 125-08 (1.0)	5623 010-07A
(74.7)	(16.535)	(12.598)	(14.961)				
15.5	420	320	380			5549 125-08 (1.0)	5623 010-07A
(15.5)	(16.535)	(12.598)	(14.961)				

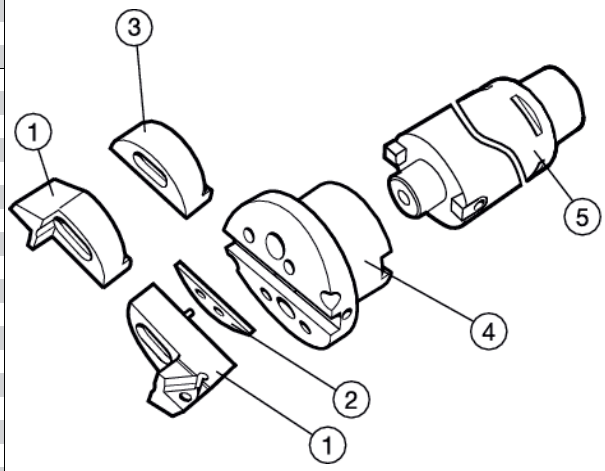

1. Slide
2. Shim
3. Cover
4. Arbor adapter
5. Dampened milling adapter

Ordering example for a complete tool including adapter and slides:
2 pieces 391.68A-7-125 40 T16 B (slides)
1 piece 393.69A-7-32 060 A (arbor adapter)
1 piece C8-391-06-32 320 (milling adaptor)

Coromant Capto®

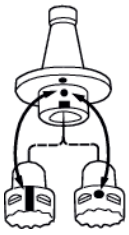

Assembly

Note!
When assembling, make sure that the marks are in line.

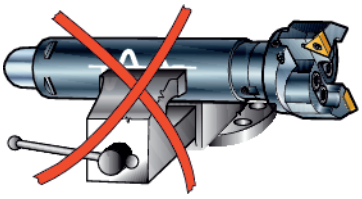

For proper assembly fixtures, see information in Metal cutting technical guide

Heavy duty boring tools R391.B…-R

Coromant Capto®

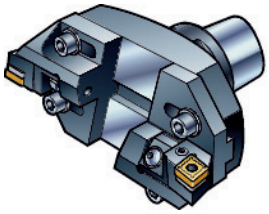

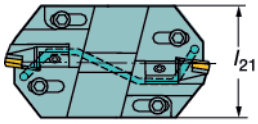

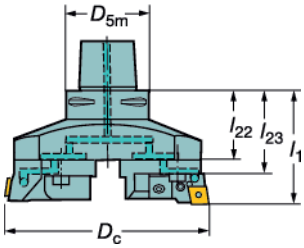

Boring range:	150-300 mm (5.906-11.811 inch)
Boring depth:	4 x D_{5m}
Hole tolerance:	IT9
Cutting fluid:	Internal

l_1 = programming length

Boring range mm (inch) D_c min – max	Coupling size	Entering angle	Lead angle	Insert type[1] ISO	ANSI	iC	1. Cartridge[4] Ordering code	2. Extension slide Ordering code	4. Adapter Ordering code
150–200	C8	90°	0°	TN…22	TN...43	1/2	PTGNL 20CA-22	R391.B04R-2515	C8-R391.B11R-B 070 A
(5.906-7.874)		75°	15°	SN…15	SN...54	5/8	PSRNL 20CA-15		
		95°	-5°	CN…19	CN...64	3/4	L441.31-2030-1911	R391.B03R-3015	C8-R391.B11R-B 070 A
200–250		90°	0°	TN…22	TN...43	1/2	PTGNL 20CA-22	R391.B04R-2515	C8-R391.B12R-C 070 A
(7.874-9.843)		75°	15°	SN…15	SN...54	5/8	PSRNL 20CA-15		
		95°	-5°	CN…19	CN...64	3/4	L441.31-2030-1911	R391.B03R-3015	C8-R391.B12R-C 070 A
250-300		90°	0°	TN…22	TN...43	1/2	PTGNL 20CA-22	R391.B04R-2515	C8-R822S17-AL 070 A
(9.843-11.811)		75°	15°	SN…15	SN...54	5/8	PSRNL 20CA-15		
		95°	-5°	CN…19	CN...64	3/4	L441.31-2030-1911	R391.B03R-3015	C8-R822S17-AL 070 A

1) Inserts are ordered separately.
2) When step boring, the l_1 dimension increases by 2 mm (.079 inch).
3) Tightening torque for extension slide
4) Tightening torque 28 ft.lbs (38.0 Nm)

Coromant Capto tightening torque:
Size C8: 160-180 Nm (118-133 lbf-ft)

F59

G6

F112

F90

F2

J2

SANDVIK Coromant

Twin edge boring

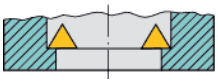

2 Cartridges
2 Extension slides
1 Adapter

Step boring

0° slides should be used.

2 Cartridges
2 Extension slides
1 Shim
1 Adapter

Single edge boring

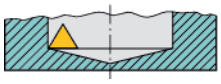

1 Cartridge
1 Extension slide
1 Adapter

Weight	D_{5m}	l_1 2)	l_{21}	l_{22}	l_{23}	Nm 3)	ft-lbs 3)	3. Shim (mm)
7.1 (15.7)	80 (3.150)	110 (4.331)	104 (4.094)	70 (2.756)	85 (3.346)	75.0	55.3	5654 016-01 (2.0)
7.3 (16.1)	80 (3.150)	115 (4.528)	104 (4.094)	70 (2.756)	85 (3.346)			5654 016-02 (2.0)
8.6 (19.0)	80 (3.150)	110 (4.331)	104 (4.094)	70 (2.756)	85 (3.346)			5654 016-01 (2.0)
8.7 (19.2)	80 (3.150)	115 (4.528)	104 (4.094)	70 (2.756)	85 (3.346)			5654 016-02 (2.0)
9.6 (21.2)	80 (3.150)	110 (4.331)	104 (4.094)	70 (2.756)	85 (3.346)			5654 016-01 (2.0)
9.7 (21.4)	80 (3.150)	115 (4.528)	104 (4.094)	70 (2.756)	85 (3.346)			5654 016-02 (2.0)

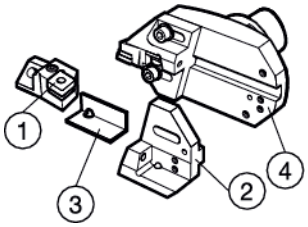

1. Cartridge
2. Extension slide
3. Shim
4. Adapter

Ordering example for a complete tool, diameter 5.905 inch, including adapter, extension slides and cartridges:

2 pieces PTGNL 20CA-22 (cartridges)
2 pieces R391.B04R-2515 (slides)
1 piece C8-R391.B11R-B 070 A (adapter)

Coromant Capto®

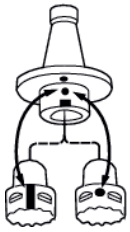

Assembly

Note!
When assembling, make sure that the marks are in line.

CoroBore® 825/CoroBore® 826

Fine boring tool system

For conventional boring or back boring with high precision

CoroBore® 825 ø 19-315 mm (.748-12.401 inch)
CoroBore® 826 ø 150-315 mm (5.906-12.401 inch)

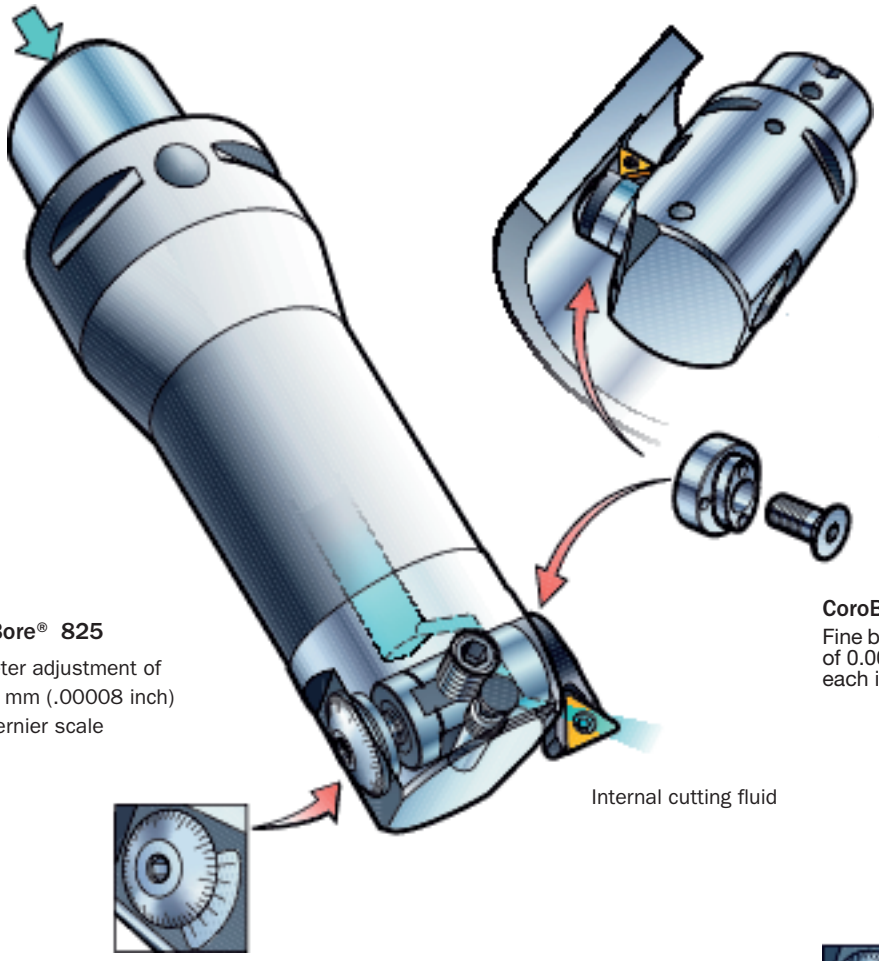

Slide extensions for radial adjustment and backboring

CoroBore® 825
Diameter adjustment of 0.002 mm (.00008 inch) with vernier scale

CoroBore® 826
Fine boring head with diameter adjustment of 0.002 mm (.00008 inch) with click for each increment

Internal cutting fluid

Cartridges for CoroTurn 107 and CoroTurn 111 inserts
- wide choice of inserts

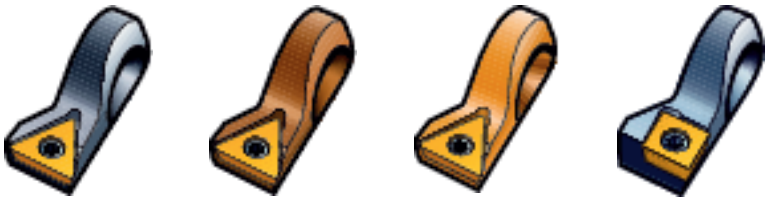

CoroTurn 107
TCMT 06, 09
(TCMT 1.2, 1.8)

CoroTurn 107
TCMT 1103
(TCMT 22)

CoroTurn 111
TPMT

CoroTurn 107
CCMT 09
(CCMT 3 (2.5))

Cartridge designed for highest stability

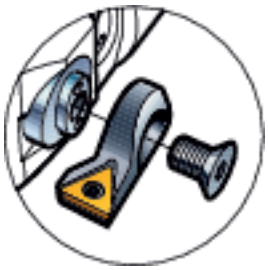

ISO application areas:

P M K N S H

SANDVIK Coromant

CoroBore® 825 XL/CoroBore® 826 XL

Fine boring tool system

For large diameter boring

Rigid system for maximum stability with internal coolant supply

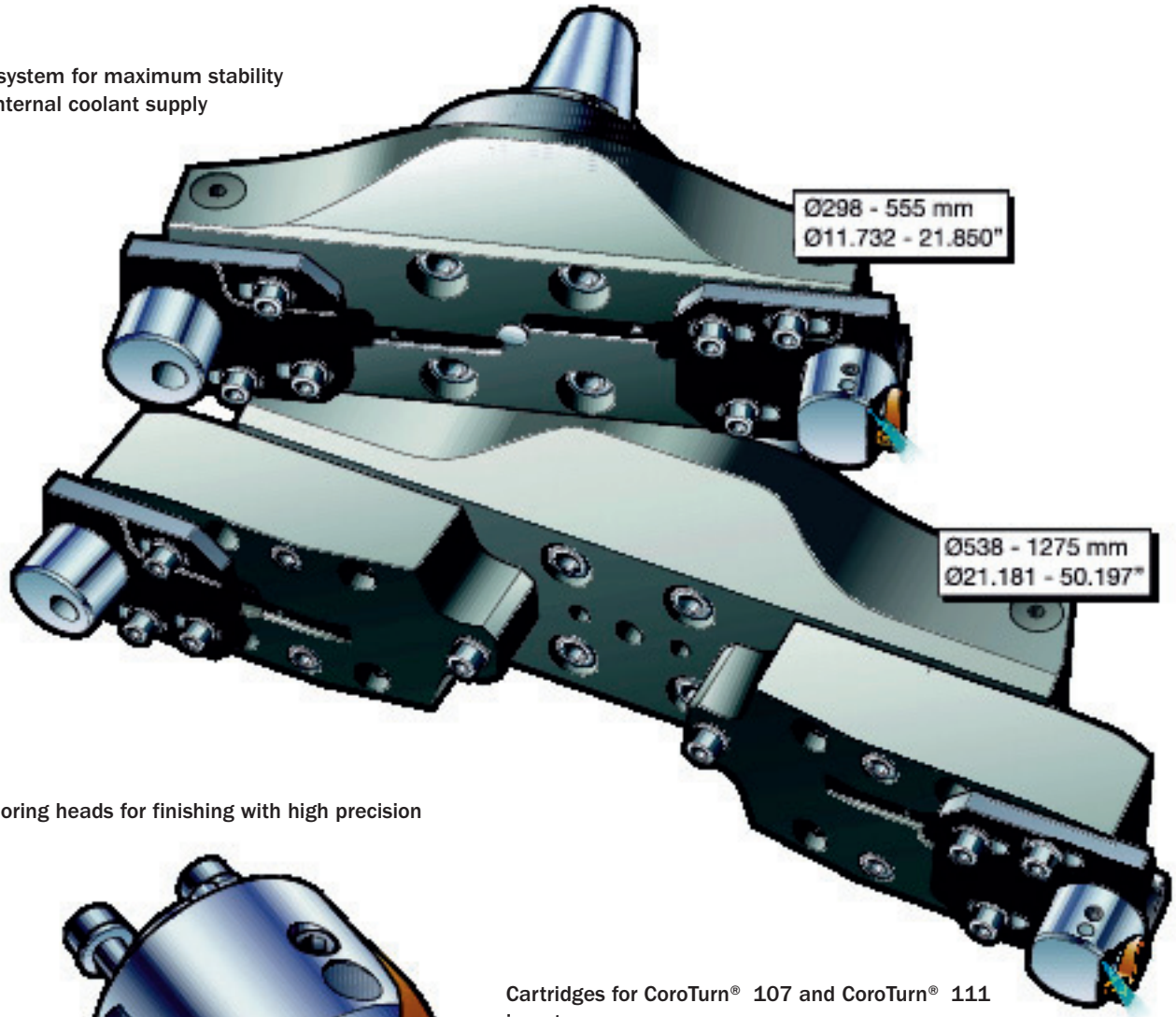

Fine boring heads for finishing with high precision

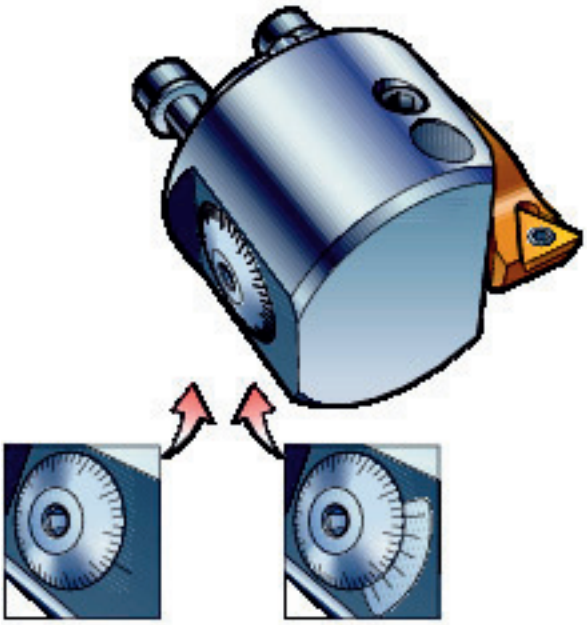

Cartridges for CoroTurn® 107 and CoroTurn® 111 inserts

CoroTurn 107	CoroTurn 107	CoroTurn 111
TCMT1103	CCMT09	TPMT11
(TCMT 22)	(CCMT 3 (2.5))	(TPMT 22)

Cartridge designed for highest stability

CoroBore® 826 XL
Diameter adjustment of 0.002 mm (.00008 inch) with click for each increment

CoroBore® 825 XL
Diameter adjustment of 0.002 mm (.00008 inch) with vernier scale

CoroBore® 825

Boring range 19 - 42 mm (.748 - 1.654 inch)

Cylindrical shank

Slide extension set

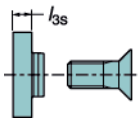

92° (-2°) CoroTurn® 107
R825A-AFxxSTUC

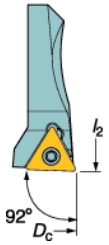

92° (-2°) CoroTurn® 111
R825A-AFxxSTUP

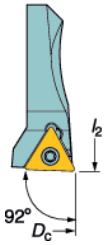

Boring range	19-42 mm (.748-1.654 inch)
Hole tolerance	IT6
Dia. adjustment	0.002 mm (.00008 inch)
Boring depth	4 x Dm_m
Cutting fluid	Internal
Cutting speed, v_c max:	1200 m/min (3937 ft/min)

Always adjust from center towards periphery

Boring range[1] mm (inch) D_{c1} min-max	D_{c2}[3] min-max	Entering angle κ_r	Lead angle	Insert type[2] ISO	ANSI	*iC*	Cartridge Ordering code	Slide extension Ordering code	Adapter Ordering code
19-23	25-29	92°	-2°	TP...06	TP...1.2	5/32	**R825A-AF11STUP06T1A**	**825A-030A**	**A18-R825A-A18116-RA**
(.748-.906)	(.984-1.142)	92°	-2°	TC...06	TC...1.2	5/32	**R825A-AF11STUC06T1A**		
23-29	29-35	92°	-2°	TP...06	TP...1.2	5/32	**R825A-AF11STUP06T1A**	**825A-030A**	**A20-R825A-AA120-RA**
(.906-1.142)	(1.142-1.378)	92°	-2°	TC...06	TC...1.2	5/32	**R825A-AF11STUC06T1A**		
28-36	34-42	92°	-2°	TP...06	TP...1.2	5/32	**R825A-AF11STUP06T1A**	**825A-030A**	**A25-R825A-AB146-RA**
(1.102-1.417)	(1.339-1.654)	92°	-2°	TC...06	TC...1.2	5/32	**R825A-AF11STUC06T1A**		

1) Dimensions are given for inserts with 0.4 mm (.016 inch) nose radius.
2) Inserts are ordered separately.
3) Boring range with slide extension, front and back boring (D_{c2})
4) Back boring

Ordering example: 1 piece R825A-AF11STUP06T1A
1 piece A20-R825A-AA120-RA

Tightening torques
Cartridge = 1.2 Nm (0.89 ft.lbs)
Locking screw diameter:
19-29 mm (.748-1.142 inch) = 0.9 Nm (0.66 lbf-ft)
28-36 mm (1.102-1.417 inch)=1.2 Nm (0.89 lbf-ft)
Insert screw=0.6 Nm (0.44 ft.lbs)

F59

G6

F114
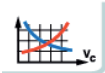
F90

F2

J2

SANDVIK Coromant

Cylindrical shank

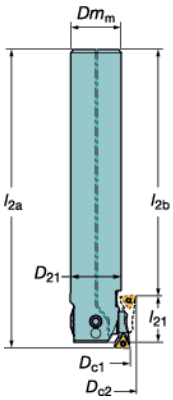

l_2 = Programming length

Dimensions, mm (inch)

Weight, kg (lbs)	D_{21} Dm_m	l_{2a}	l_{2b} 4)	l_{21}	l_{3s}
0.23 (0.5)	18 (.709)	125.5 (4.941)	103.5 (4.075)	19.5 (.768)	3.0 (.118)
0.35 (0.77)	20 (.787)	132 (5.197)	110 (4.331)	19.5 (.768)	3.0 (.118)
0.65 (1.43)	25 (.984)	158 (6.220)	136 (5.354)	19.5 (.768)	3.0 (.118)

CoroBore® 825

Boring range 19 - 176.6 mm (.748 - 6.953 inch)

Coromant Capto®

HSK

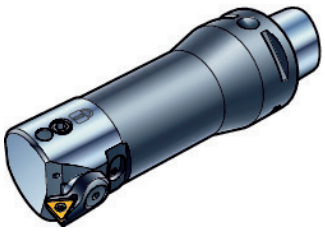

Slide extension set

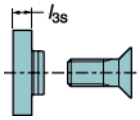

Conventional boring

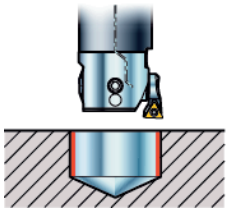

Back boring

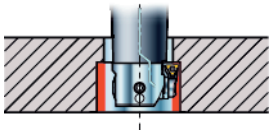

92° (-2°) CoroTurn® 107
R825x-AFxxSTUC

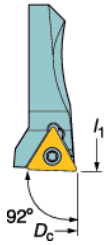

92° (-2°) CoroTurn® 111
R825x-AFxxSTUP

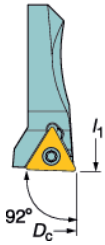

95° (-5°) CoroTurn® 107
R825C-AF27SCLC

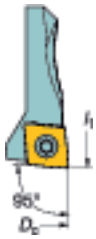

Boring range	19-176.6 mm (.748-6.953 inch)
Hole tolerance	IT6
Dia. adjustment	0.002 mm (.00008 inch)
Cutting fluid	Internal
Cutting speed, v_c max:	1200 m/min (3937 ft/min)

Always adjust from center towards periphery

Boring range[1] mm (inch) D_{c1} min-max	D_{c2}[4] min-max	D_{c2}[5] min-max	Coupling size	Entering angle κ_r	Lead angle	Insert type[2] ISO	ANSI	iC	Cartridge Ordering code	Slide extension Ordering code
19-23	25-29	-	C3	92°	-2°	TP...06	TP...1.2	5/32	R825A-AF11STUP06T1A	825A-030A
(.748-.906)	(.984-1.142)	-	C3			TC...06	TC...1.2	5/32	R825A-AF11STUC06T1A	
			HSK 63-A/C							
23-29	29-35	29-29	C3	92°	-2°	TP...06	TP...1.2	5/32	R825A-AF11STUP06T1A	825A-030A
(.906-1.142)	(1.142-1.378)	(1.142-1.142)	C4			TC...06	TC...1.2	5/32	R825A-AF11STUC06T1A	
			C3							
			C4							
			HSK 63-A/C							
28-36	34-42	34-36	C3	92°	-2°	TP...06	TP...1.2	5/32	R825A-AF11STUP06T1A	825A-030A
(1.102-1.417)	(1.339-1.654)	(1.339-1.417)	C4			TC...06	TC...1.2	5/32	R825A-AF11STUC06T1A	
			C3							
			C4							
			HSK 63-A/C							
35-45	42.2-52.2	42-45	C3	92°	-2°	TP...09	TP...1.8	7/32	R825B-AF17STUP0902A	825B-036A
(1.378-1.772)	(1.661-2.055)	(1.654-1.772)	C4			TC...09	TC...1.8	7/32	R825B-AF17STUC0902A	
			HSK 63-A/C							
44-56	51.2-63.2	51-56	C4	92°	-2°	TP...09	TP...1.8	7/32	R825B-AF17STUP0902A	825B-036A
(1.732-2.205)	(2.016-2.488)	(2.008-2.205)	C5			TC...09	TC...1.8	7/32	R825B-AF17STUC0902A	
			HSK 63-A/C							
55-70	64.6-79.6	63-70	C5	92°	-2°	TP...11	TP...22	1/4	R825C-AF23STUP1103A	825C-048A
(2.165-2.756)	(2.543-3.134)	(2.480-2.756)	C6			TC...1103	TC...22	1/4	R825C-AF23STUC1103A	
			HSK 63-A/C	95°	-5°	CC…09	CC..3(2.5)	3/8	R825C-AF27SCLC09T3	
69-87	78.6-96.6	78-87	C5	92°	-2°	TP...11	TP...22	1/4	R825C-AF23STUP1103A	825C-048A
(2.717-3.425)	(3.094-3.803)	(3.071-3.425)	C6			TC...1103	TC...22	1/4	R825C-AF23STUC1103A	
			HSK 63-A/C	95°	-5°	CC…09	CC..3(2.5)	3/8	R825C-AF27SCLC09T3	
86-107	95.6-116.6	95-107	C5	92°	-2°	TP...11	TP...22	1/4	R825C-AF23STUP1103A	825C-048A
(3.386-4.213)	(3.764-4.591)	(3.740-4.213)	C6			TC...1103	TC...22	1/4	R825C-AF23STUC1103A	
			HSK 63-A/C	95°	-5°	CC…09	CC..3(2.5)	3/8	R825C-AF27SCLC09T3	
106-137	115.6-146.6	115-137	C6	92°	-2°	TP...11	TP...22	1/4	R825C-AF23STUP1103A	825C-048A
(4.173-5.394)	(4.551-5.772)	(4.528-5.394)	C8			TC...1103	TC...22	1/4	R825C-AF23STUC1103A	
			HSK 100-A/C	95°	-5°	CC…09	CC..3(2.5)	3/8	R825C-AF27SCLC09T3	
136-167	145.6-176.6	145-167	C6	92°	-2°	TP...11	TP...22	1/4	R825C-AF23STUP1103A	825C-048A
(5.354-6.575)	(5.732-6.953)	(5.709-6.575)	C8			TC...1103	TC...22	1/4	R825C-AF23STUC1103A	
			HSK 100-A/C	95°	-5°	CC…09	CC..3(2.5)	3/8	R825C-AF27SCLC09T3	

1) Dimensions are given for inserts with 0.4 mm (.016 inch) nose radius.
2) Inserts are ordered separately.
3) No clearance restriction (l_{3a}), maximum recommended hole depth=4xD_{5m}
4) Boring range with slide extension, front and back boring (D_{c2})
5) Diameter range when back boring without slide extension
6) The clearance restriction (l_{3a} or l_{3b}) is only valid when boring diameter (D_c) is smaller than the coupling diameter (D_{5m}). Maximum recommended hole depth (for forward boring) when the boring diameter (D_c) is larger than the coupling diameter (D_{5m}) = 4xD_{21}
7) For R825C-AF27SCLC09T3, increase l1a, l3a and l21 by 4 mm (.157 inch) and decrease l1b and l3b by 4 mm (.157 inch).

F59 G6 F114 F90 F2 J2

SANDVIK Coromant

CoroBore® 825

Coromant Capto

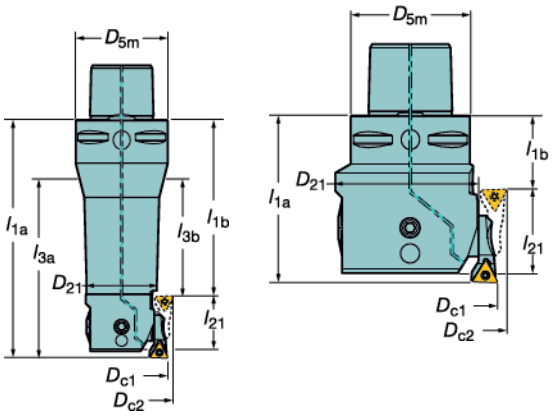

HSK

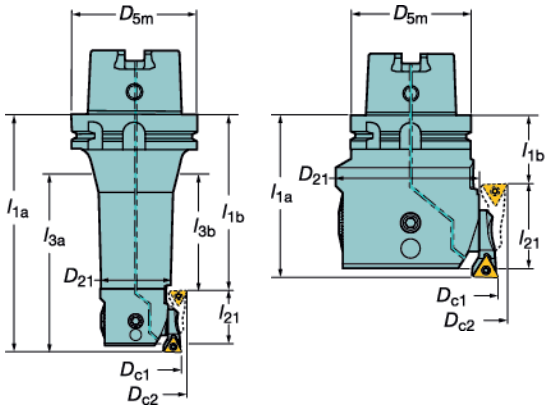

l_1 = programming length

Adapter	Dimensions, mm (inch)						Back boring		
Ordering code	KG	D_{5m}	D_{21}	l_{1a} 7)	l_{3a} 7)	l_{3s}	l_{1b} 7)	l_{21}	l_{3b} 7)
C3-R825A-AA18055A	0.21	32 (1.260)	18 (.709)	66 (2.598)	2xD_c	3.0 (.118)	44 (1.732)	19.5 (.768)	2xD_c-22 (.866)
C3-R825A-AA18078A	0.26	32 (1.260)	18 (.709)	89 (3.504)	3xD_c	3.0 (.118)	67 (2.638)	19.5 (.768)	3xD_c-22 (.866)
HA06-R825A-AA18077A	0.85	63 (2.480)	18 (.709)	88 (3.465)	2xD_c	3.0 (.118)	66 (2.598)	19.5 (.768)	2xD_c-22 (.866)
C3-R825A-AAA065A	0.28	32 (1.260)	20 (.787)	76 (2.992)	2xD_c	3.0 (.118)	54 (2.126)	19.5 (.768)	2xD_c-22 (.866) 6)
C4-R825A-AAA074A	0.45	40 (1.575)	20 (.787)	85 (3.346)	2xD_c	3.0 (.118)	63 (2.480)	19.5 (.768)	2xD_c-22 (.866)
C3-R825A-AAA094A	0.35	32 (1.260)	20 (.787)	105 (4.134)	3xD_c	3.0 (.118)	83 (3.268)	19.5 (.768)	3xD_c-22 (.866) 6)
C4-R825A-AAA103A	0.52	40 (1.575)	20 (.787)	114 (4.488)	3xD_c	3.0 (.118)	92 (3.622)	19.5 (.768)	3xD_c-22 (.866)
HA06-R825A-AAA086A	0.91	63 (2.480)	20 (.787)	97 (3.819)	2xD_c	3.0 (.118)	75 (2.953)	19.5 (.768)	2xD_c-22 (.866)
C3-R825A-AAB072A	0.38	32 (1.260)	25 (.984)	83 (3.268)	2xD_c 6)	3.0 (.118)	61 (2.402)	19.5 (.768)	-
C4-R825A-AAB084A	0.56	40 (1.575)	25 (.984)	95 (3.740)	2xD_c	3.0 (.118)	73 (2.874)	19.5 (.768)	2xD_c-22 (.866) 6)
C3-R825A-AAB106A	0.51	32 (1.260)	25 (.984)	117 (4.606)	3xD_c	3.0 (.118)	95 (3.740)	19.5 (.768)	-
C4-R825A-AAB120A	0.71	40 (1.575)	25 (.984)	131 (5.158)	3xD_c	3.0 (.118)	109 (4.291)	19.5 (.768)	3xD_c-22 (.866) 6)
HA06-R825A-AAB097A	1.04	63 (2.480)	25 (.984)	108 (4.252)	2xD_c	3.0 (.118)	86 (3.386)	19.5 (.768)	2xD_c-22 (.866)
C3-R825B-AAC031A	0.28	32 (1.260)	32 (1.260)	48 (1.890)	3)	3.6 (.142)	14 (.551)	31 (1.220)	-
C4-R825B-AAC066A	0.61	40 (1.575)	32 (1.260)	83 (3.268)	1.5xD_c 6)	3.6 (.142)	49 (1.929)	31 (1.220)	-
HA06-R825B-AAC081A	1.11	63 (2.480)	32 (1.260)	98 (3.858)	1.5xD_c	3.6 (.142)	64 (2.520)	31 (1.220)	1.5xD_c-34 (1.339)
C4-R825B-AAD039A	0.53	40 (1.575)	40 (1.575)	56 (2.205)	3)	3.6 (.142)	22 (.866)	31 (1.220)	-
C5-R825B-AAD081A	1.14	50 (1.969)	40 (1.575)	98 (3.858)	1.5xD_c 6)	3.6 (.142)	64 (2.520)	31 (1.220)	-
HA06-R825B-AAD094A	1.47	63 (2.480)	40 (1.575)	111 (4.370)	1.5xD_c	3.6 (.142)	77 (3.031)	31 (1.220)	1.5xD_c-34 (1.339)
C5-R825C-AAE043A	0.98	50 (1.969)	50 (1.969)	66 (2.598)	3)	4.8 (.189)	20 (.787)	42 (1.654)	-
C6-R825C-AAE097A	2.27	63 (2.480)	50 (1.969)	120 (4.724)	1.5xD_c 6)	4.8 (.189)	74 (2.913)	42 (1.654)	1.5xD_c-46 (1.811) 6)
HA06-R825C-AAE101A	1.98	63 (2.480)	50 (1.969)	124 (4.882)	1.5xD_c 6)	4.8 (.189)	78 (3.071)	42 (1.654)	1.5xD_c-46 (1.811) 6)
C5-R825C-AAF047A	1.38	50 (1.969)	63 (2.480)	70 (2.756)	3)	4.8 (.189)	24 (0.945)	42 (1.654)	-
C6-R825C-AAF055A	1.87	63 (2.480)	63 (2.480)	78 (3.071)	3)	4.8 (.189)	32 (1.260)	42 (1.654)	-
HA06-R825C-AAF059A	1.69	63 (2.480)	63 (2.480)	82 (3.228)	3)	4.8 (.189)	36 (1.417)	42 (1.654)	-
C5-R825C-AAG053A	2.17	50 (1.969)	80 (3.150)	76 (2.992)	3)	4.8 (.189)	30 (1.181)	42 (1.654)	-
C6-R825C-AAG067A	2.62	63 (2.480)	80 (3.150)	90 (3.543)	3)	4.8 (.189)	44 (1.732)	42 (1.654)	-
HA06-R825C-AAG072A	2.31	63 (2.480)	80 (3.150)	95 (3.740)	3)	4.8 (.189)	49 (1.929)	42 (1.654)	-
C6-R825C-AAH067A	3.10	63 (2.480)	100 (3.937)	90 (3.543)	3)	4.8 (.189)	44 (1.732)	42 (1.654)	-
C8-R825C-AAH077A	4.30	80 (3.150)	100 (3.937)	100 (3.937)	3)	4.8 (.189)	54 (2.126)	42 (1.654)	-
HA10-R825C-AAH087A	5.20	100 (3.937)	100 (3.937)	110 (4.331)	3)	4.8 (.189)	64 (2.520)	42 (1.654)	-
C6-R825C-AAI067A	3.90	63 (2.480)	130 (5.118)	90 (3.543)	3)	4.8 (.189)	44 (1.732)	42 (1.654)	-
C8-R825C-AAI077A	5.00	80 (3.150)	130 (5.118)	100 (3.937)	3)	4.8 (.189)	54 (2.126)	42 (1.654)	-
HA10-R825C-AAI087A	5.80	100 (3.937)	130 (5.118)	110 (4.331)	3)	4.8 (.189)	64 (2.520)	42 (1.654)	-

Ordering example: 1 piece R825A-AF11STUP06T1A
1 piece C3-R825A-AAA065A

Tightening torques

For Coromant Capto® coupling:
Size
C3: = 40-50 Nm (30-36 ft.lbs)
C4: = 50-100 Nm (36-44 ft.lbs)
C5: = 90-100 Nm (66-74 ft.lbs)
C6/C8: = 160-180 Nm (118-133 ft.lbs)

For cartridge screw:
Boring range
Ø19-36 (.748-1.417) = 1.2 Nm (.9 ft.lbs)
Ø35-56 (1.378-2.205) = 3.1 Nm (2.3 ft.lbs)
Ø55-167 (2.165-6.575) = 5.8 Nm (4.3 ft.lbs)

For locking screw:
Boring range
Ø19-29 (.748-1.142) = 0.9 Nm (.7 ft.lbs)
Ø28-36 (1.102-1.417) = 1.2 Nm (.9 ft.lbs)
Ø35-56 (1.378-2.205) = 3.1 Nm (2.3 ft.lbs)
Ø55-167 (2.165-6.575) = 5.8 Nm (4.3 ft.lbs)

For insert screw (CoroTurn 107):
Size
TC/TP06 (5/32) = 0.6 Nm (.4 ft.lbs)
TC/TP09 (7/32) = 0.8 Nm (.6 ft.lbs)
TC/TP11 (1/4) = 0.9 Nm (.7 ft.lbs)
CC09 (3/8) = 3.0 Nm (2.2 ft.lbs)

CoroBore® 825/CoroBore® 826

Boring range 150 - 324.6 mm (5.906 - 12.779 inch)

Coromant Capto®

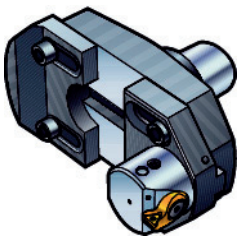

Internal

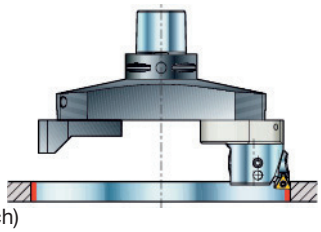

External

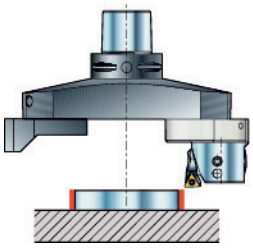

Boring range	150-324.6 mm (5.905-12.779 inch)
Boring depth	4 × D_{5m}
Hole tolerance	IT6
Dia. adjustment	0.002 mm (.00008 inch)
Cutting fluid	Internal
Cutting speed, v_c max:	1200 m/min (3937 ft/min)

Always adjust from center towards periphery

CoroBore® 825

Precision adjustment with vernier scale (0.002 mm (.00008") on dia.)

One full turn of the scale will change dia. by 0.5 mm (0.020")

Adjustable radial stroke on fine boring head 7.5 mm (.295")

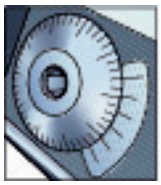

CoroBore® 826

Precision adjustment with click on each increment (0.002 mm (.00008") on dia.)

One full turn of the scale will change dia. by 0.1 mm (0.0039")

Adjustable radial stroke on fine boring head 0.5 mm (.020")

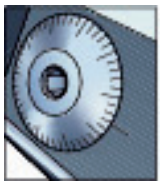

Boring range, mm (inch)[1]								1. Cartridge	2. Fine boring head
Internal D_{ci}[3] min - max Fine boring head		External D_{co}[4] min - max				Insert type[2]			
CB825	CB826	CB825	CB826	Entering angle κ_r	Lead angle	ISO	ANSI	**Ordering code**	**Ordering code**
150-215	150-200	25-90	25-75	92°	-2°	TP...11	TP...22	R825C-AF23STUP1103A	A34-R825C-E 017 A
(5.906-8.464)	(5.906-7.874)	(.984-3.543)	(.984-2.953)	92°	-2°	TC...1103	TC...22	R825C-AF23STUC1103A	A34-R826C-E017
				95°	-5°	CC...09	CC...3(2.5)	R825C-AF27SCLC09T3	
200-265	200-250	75-140	75-125	92°	-2°	TP...11	TP...22	R825C-AF23STUP1103A	A34-R825C-E 017 A
(7.873-10.433)	(7.874-9.843)	(2.953-5.512)	(2.953-4.921)	92°	-2°	TC...1103	TC...22	R825C-AF23STUC1103A	A34-R826C-E017
				95°	-5°	CC...09	CC...3(2.5)	R825C-AF27SCLC09T3	
250-315	250-300	125-190	125-175	92°	-2°	TP...11	TP...22	R825C-AF23STUP1103A	A34-R825C-E 017 A
(9.842-12.401)	(9.843-11.811)	(4.921-7.480)	(4.921-6.890)	92°	-2°	TC...1103	TC...22	R825C-AF23STUC1103A	A34-R826C-E017
				95°	-5°	CC...09	CC...3(2.5)	R825C-AF27SCLC09T3	

1) Dimensions are given for inserts with 0.4 mm (.016 inch) nose radius.
2) Inserts are ordered separately.
3) D_{ci} max - min are changed +9.6 mm (.378 inch) when using slide extensions
4) D_{co} max - min are changed -9.6 mm (.378 inch) when using slide extensions
5) For R825C-AF27SCLC09T3, increase l1 and l3 by 4 mm (.157 inch)

1. Cartridge
2. Fine boring head
3. Slide
4. Slide extension
5. Adapter
6. Counterweight

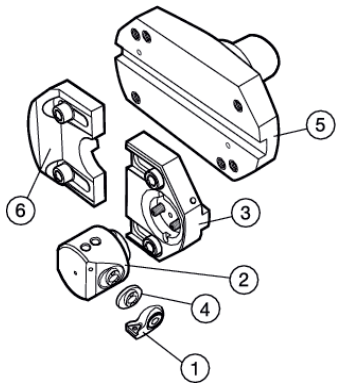

F59 G6 F114 F90 F2 J2

SANDVIK Coromant

CoroBore® 825/CoroBore® 826

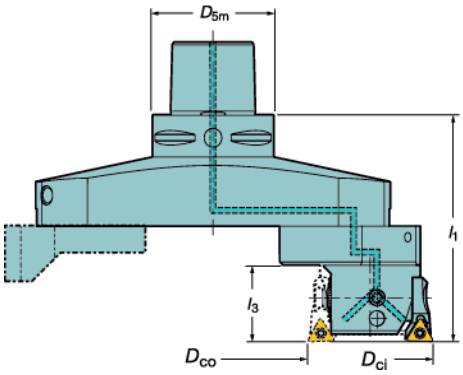

92° (-2°) CoroTurn® 107
R825C-AF23STUC

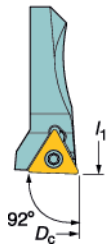

92° (-2°) CoroTurn® 111
R825C-AF23STUP

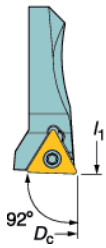

95° (-5°) CoroTurn® 107
R825C-AF27SCLC

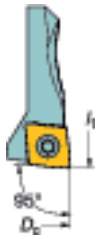

Slide extension set

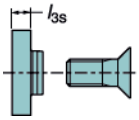

3. Slide	4. Slide extension		5. Adapter	Dimensions, mm (inch)					
Ordering code	Ordering code	Coupling size	**Ordering code**	KG	D_{5m}	l_1 5)	l_3 5)	l_{3s}	6. Counterweight
S17-R825A34-020 A	825C-048A	C6	C6-R825S17-AJ 058 A	5.2	63	118	39	4.8	S17-825-CW A
					(2.480)	(4.646)	(1.535)	(.189)	
		C8	C8-R391.B11R-B 070 A	6.1	80	130	39	4.8	
					(3.150)	(5.118)	(1.535)	(.189)	
S17-R825A34-020 A	825C-048A	C6	C6-R825S17-AK 058 A	6.4	63	118	39	4.8	S17-825-CW A
					(2.480)	(4.646)	(1.535)	(.189)	
		C8	C8-R391.B12R-C 070 A	7.2	80	130	39	4.8	
					(3.150)	(5.118)	(1.535)	(.189)	
S17-R825A34-020 A	825C-048A	C6	C6-R825S17-AL 058 A	7.7	63	118	39	4.8	S17-825-CW A
					(2.480)	(4.646)	(1.535)	(.189)	
		C8	C8-R822S17-AL 070 A	9.1	80	130	39	4.8	
					(3.150)	(5.118)	(1.535)	(.189)	

Ordering example for a complete tool, boring range 5.906-8.464 inch, including adapter C6, slide, fine boring head, counterweight and cartridge for TP... inserts:
1 piece C6-R825S17-AJ 058 A (adapter)
1 piece S17-R825A34-020 A (slide)
1 piece A34-R825C-E 017 A (fine boring head)
1 piece R825C-AF23STUP1103A (cartridge)
1 piece S17-825-CW A (counterweight)

Tightening torques

Coromant Capto® C6-C8: 160-180 Nm

For slide + counterweight:	75	Nm	(55 ft.lbs)
For fine boring head:	16	Nm	(12 ft.lbs)
For cartridge screw:	6	Nm	(4.4 ft.lbs)
For locking screw:	6	Nm	(4.4 ft.lbs)
For insert screw (TC/TP..22):	0.9	Nm	(.7 ft.lbs)
For insert screw (CC..3(2.5)):	3	Nm	(2.2 ft.lbs)

CoroBore® 825 dampened

Boring range 23 - 176.6 mm (.906-6.953 inch)

Coromant Capto®

Conventional boring

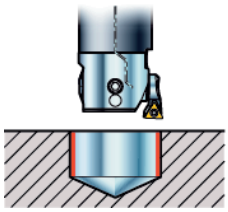

Back boring

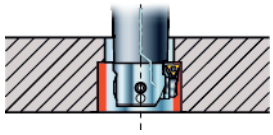

Boring range 23 - 176.6 mm (.906-6.953 inch)

Boring depth	6 × D_c[6]
Hole tolerance	IT6
Dia. adjustment	0.002 mm (.00008 inch)
Cutting fluid	Internal
Cutting speed v_c	600 m/min (1968 ft/min)

Always adjust from center towards periphery

Boring range[1]						Insert type[2]			Cartridge	Slide extension
D_{c1} min - max	D_{c2}[4] min - max	D_{c2}[5] min - max	Entering angle	Lead angle	Coupling size	ISO	ANSI	*iC*	Ordering code	Ordering code
23-29	29-35	29-29	92°	-2°	C3	TP...06	TP...1.2	5/32	R825A-AF11STUP06T1A	825A-030A
(.906-1.142)	(1.142-1.378)	(1.142-1.142)				TC...06	TC...1.2		R825A-AF11STUC06T1A	
28-36	34-42	34-36	92°	-2°	C3	TP...06	TP...1.2	5/32	R825A-AF11STUP06T1A	825A-030A
(1.102-1.417)	(1.399-1.654)	(1.339-1.417)				TC...06	TC...1.2		R825A-AF11STUC06T1A	
35-45	42.2-52.2	42-45	92°	-2°	C4	TP...09	TP...1.8	7/32	R825B-AF17STUP902A	825B-036A
(1.378-1.772)	(1.661-2.055)	(1.654-1.772)				TC...09	TC...1.8		R825B-AF17STUC902A	
44-56	51.2-63.2	51-56	92°	-2°	C5	TP...09	TP...1.8	7/32	R825B-AF17STUP902A	825B-036A
(1.732-2.205)	(2.016-2.488)	(2.008-2.205)				TC...09	TC...1.8		R825B-AF17STUC902A	
55-70	64.6-79.6	63-70	92°	-2°	C5	TP...1103	TP...22	1/4	R825C-AF23STUP1103A	825C-048A
(2.165-2.756)	(2.543-3.134)	(2.480-2.756)			C6	TC...1103	TC...22		R825C-AF23STUC1103A	
69-87	78.6-96.6	78-87	92°	-2°	C6	TP...1103	TP...22	1/4	R825C-AF23STUP1103A	825C-048A
(2.717-3.425)	(3.304-3.893)	(3.071-3.425)			C8	TC...1103	TC...22		R825C-AF23STUC1103A	
86-107	95.6-116.6	95-107	92°	-2°	C6	TP...1103	TP...22	1/4	R825C-AF23STUP1103A	825C-048A
(3.386-4.213)	(3.764-4.591)	(3.740-4.213)			C8	TC...1103	TC...22		R825C-AF23STUC1103A	
106-137	115.6-146.6	115-137	92°	-2°	C6	TP...1103	TP...22	1/4	R825C-AF23STUP1103A	825C-048A
(4.173-5.394)	(4.551-5.772)	(4.528-5.394)			C8	TC...1103	TC...22		R825C-AF23STUC1103A	
136-167	145.6-176.6	145-167	92°	-2°	C6	TP...1103	TP...22	1/4	R825C-AF23STUP1103A	825C-048A
(5.354-6.575)	(5.732-6.953)	(5.709-6.575)			C8	TC...1103	TC...22		R825C-AF23STUC1103A	

1) Dimensions are given for inserts with 0.4 mm (.016 inch) nose radius.
2) Inserts are ordered separately.
3) No clearance restriction (l_{3a} or l_{3b}), maximum recommended hole depth = 6 x D_{5m} for forward boring and 6x D_{5m}-l_{21} for back boring
4) Boring range with slide extension, front and back boring (D_{c2})
5) Diameter range when back boring without slide extension
6) The clearance restriction is only valid when boring diameter (D_c) is smaller than the coupling diameter (D_{5m}). Maximum recommended hole depth when the boring diameter (D_c) is larger than the coupling diameter (D_{5m}) = 6 x D_{5m} for forward boring and 6 x D_{5m} - l_{21} for back boring.

F59 G6 F114 F90 F2 J2

SANDVIK Coromant

CoroBore® 825 dampened

92° (-2°) CoroTurn® 107
R825x-AFxxSTUC

92° (-2°) CoroTurn® 111
R825x-AFxxSTUP

Slide extension set

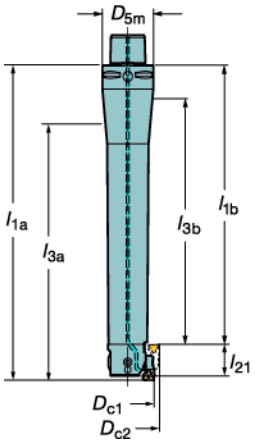

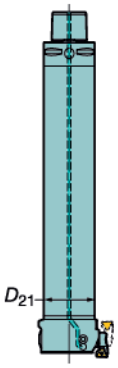

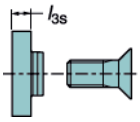

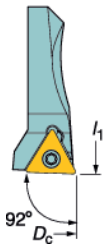

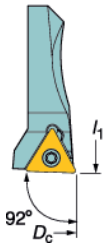

l_1 = programming length

Adapter	Dimensions, mm (inch)						Back boring		
Ordering code	kg	D_{5m}	D_{21}	l_{1a}	l_{3a}	l_{3s}	l_{1b}	l_{21}	l_{3b}
C3-R825A-FAA181A	0.6	32 (1.260)	20 (.787)	192 (7.560)	6xD_c	3.0 (.118)	170 (6.693)	19.5 (.768)	6xD_c-22 (.866)[6]
C3-R825A-FAB208A	1.1	32 (1.260)	25 (.984)	219 (8.622)	6xD_c[6]	3.0 (.118)	197 (7.756)	19.5 (.768)	[3]
C4-R825B-FAC255A	2.2	40 (1.575)	32 (1.260)	272 (10.709)	6xD_c[6]	3.6 (.142)	238 (9.370)	31 (1.220)	[3]
C5-R825B-FAD315A	4.1	50 (1.969)	40 (1.575)	332 (13.071)	6xD_c[6]	3.6 (.142)	298 (11.732)	31 (1.220)	6xD_c-34 (1.339)[6]
C5-R825C-FAE237A	3.9	50 (1.969)	50 (1.969)	260 (10.236)	[3]	4.8 (.189)	214 (8.425)	42 (1.654)	[3]
C6-R825C-FAE389A	7	63 (2.480)	50 (1.969)	412 (16.220)	6xD_c[6]	4.8 (.189)	366 (14.409)	42 (1.654)	6xD_c-46(1.811)[6]
C6-R825C-FAF307A	8	63 (2.480)	63 (2.480)	330 (12.992)	[3]	4.8 (.189)	284 (11.181)	42 (1.654)	[3]
C8-R825C-FAF499A	14.5	80 (3.150)	63 (2.480)	522 (20.551)	6xD_c[6]	4.8 (.189)	476 (18.740)	42 (1.654)	6xD_c-46(1.811)[6]
C6-R825C-FAG307A	7.4	63 (2.480)	80 (3.150)	330 (12.992)	[3]	4.8 (.189)	284 (11.181)	42 (1.654)	[3]
C8-R825C-FAG377A	14.6	80 (3.150)	80 (3.150)	400 (15.748)	[3]	4.8 (.189)	354 (13.937)	42 (1.654)	[3]
C6-R825C-FAH307A	7.7	63 (2.480)	100 (3.937)	330 (12.992)	[3]	4.8 (.189)	284 (11.181)	42 (1.654)	[3]
C8-R825C-FAH377A	15	80 (3.150)	100 (3.937)	400 (15.748)	[3]	4.8 (.189)	354 (13.937)	42 (1.654)	[3]
C6-R825C-FAI307A	7.9	63 (2.480)	130 (5.118)	330 (12.992)	[3]	4.8 (.189)	284 (11.181)	42 (1.654)	[3]
C8-R825C-FAI377A	15.6	80 (3.150)	130 (5.118)	400 (15.748)	[3]	4.8 (.189)	354 (13.937)	42 (1.654)	[3]

Ordering example: 1 piece R825A-AF11STUP06T1A (cartridge)
1 piece C3-R825A-FAA181A (adapter)

Tightening torques

For Coromant Capto® coupling:
Size
C3 = 40-50 Nm (30-37 lbf-ft)

C4 = 50-160 Nm (37-44 lbf-ft)

C5= 90-100 Nm (67-74 lbf-ft)

C6= 160-180 Nm (118-133 lbf-ft)

For cartridge screw:
Boring range
Ø23-36 mm = 1.2 Nm
(Ø.906-1.417 inch = .89 lbf-ft)

Ø35-56 mm = 3.0 Nm
(Ø1.378-2.205 inch = 2.21 lbf-ft)

Ø55-167 mm = 6.0 Nm
(2.165-6.575 inch = 4.43 lbf-ft)

For locking screw:
Boring range
Ø23-36 mm = 0.9 Nm
(Ø.906-1.142 inch = .66 lbf-ft)

Ø28-36 mm = 1.2 Nm
(Ø1.102-1.417 inch = .89 lbf-ft)

Ø35-56 mm = 3.0 Nm
(Ø1.378-2.205 inch = 2.21 lbf-ft)

Ø55-167 mm = 6.0 Nm
(2.165-6.575 inch = 4.43 lbf-ft)

For insert screw (CoroTurn 107):
Size
06 mm = 0.6 Nm
(5/32 inch = .44 lbf-ft)

09 mm = 0.8 Nm
(7/32 inch = .59 lbf-ft)

11 mm = 0.9 Nm
(1/4 inch .66 lbf-ft)

CoroBore® 825/CoroBore® 826 dampened

Boring range 150 - 324.6 mm (5.906 - 12.779 inch)

Coromant Capto®

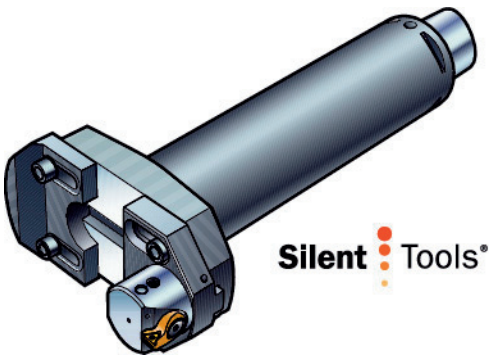

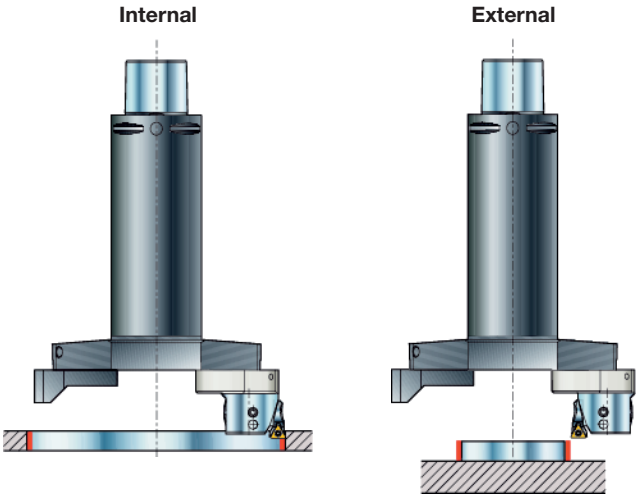

Boring range	150-324.6 mm (5.905-12.779 inch)
Boring depth	6 x D_{5m}[5]
Hole tolerance	IT6
Dia. adjustment	0.002 mm (.00008 inch)
Cutting fluid	Internal
Cutting speed, v_c max:	600 m/min (1968 ft/min)

Always adjust from center towards periphery

Boring range[1] Internal D_{ci}[3] min-max Fine boring head CB825	CB826	External D_{co}[4] min-max CB825	CB826	Entering angle κ_r	Lead angle	Insert type[2] ISO	ANSI	1. Cartridge Ordering code	2. Fine boring head Ordering code	3. Slide Ordering code
150-215	150-200	25-90	25-75	92°	-2°	TP...11	TP..22	R825C-AF23STUP1103A	A34-R825C-E 017 A	S17-R825A34-020 A
(5.906-8.464)	(5.906-7.874)	(.984-3.543)	(.984-2.953)	92°	-2°	TC...1103	TC..22	R825C-AF23STUC1103A	A34-R826C-E 017	
200-265	200-250	75-140		92°	-2°	TP...11	TP..22	R825C-AF23STUP1103A	A34-R825C-E 017 A	S17-R825A34-020 A
(7.873-10.433)	(7.874-9.843)	(2.953-5.512)		92°	-2°	TC...1103	TC..22	R825C-AF23STUC1103A	A34-R826C-E 017	
250-315	250-300	125-190		92°	-2°	TP...11	TP..22	R825C-AF23STUP1103A	A34-R825C-E 017 A	S17-R825A34-020 A
(9.842-12.401)	(9.843-11.811)	(4.921-7.480)		92°	-2°	TC...1103	TC..22	R825C-AF23STUC1103A	A34-R826C-E 017	

1) Dimensions are given for inserts with 0.4 mm (.016 inch) nose radius.
2) Inserts are ordered separately.
3) D_{ci} max - min are changed +9.6 mm (.378 inch) when using slide extensions
4) D_{co} max - min are changed -9.6 mm (.378 inch) when using slide extensions
5) For boring depth 6 × D_{5m} use long version of basic holder.

1. Cartridge
2. Fine boring head
3. Slide
4. Slide extension
5. Damped adapter
6. Counterweight

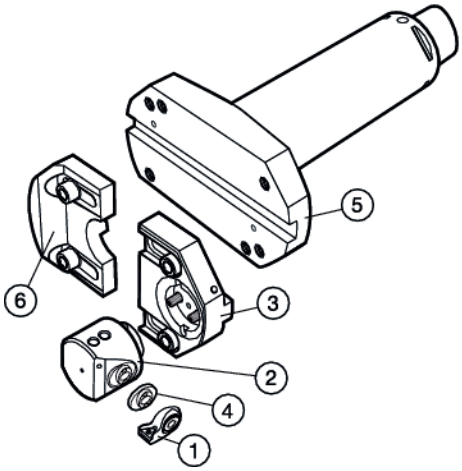

F59 G6 F114 F90 F2 J2

SANDVIK Coromant

CoroBore® 825/CoroBore® 826 dampened

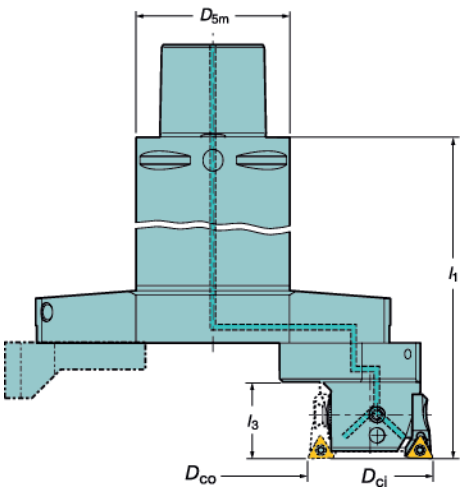

Slide extension set

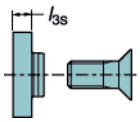

92° (-2°) CoroTurn® R825C-AF23STUC

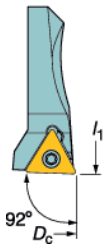

92° (-2°) CoroTurn® R825C-AF23STUP

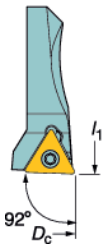

l_1 = programming length

4. Slide extension		5. Damped adapter	Dimensions, mm (inch)					6. Counterweight
Ordering code	Coupling size	Ordering code	KG	D_{5m}	l_1	l_3	l_{3s}	
825C-048A	C8	C8-R825S17-FJ340A	14	80 (3.150)	400 (15.748)	39 (1.535)	4.8 (.189)	S17-825-CW A
825C-048A	C8	C8-R825S17-FK340A	14.3	80 (3.150)	400 (15.748)	39 (1.535)	4.8 (.189)	S17-825-CW A
825C-048A	C8	C8-R825S17-FL340A	14.7	80 (3.150)	400 (15.748)	39 (1.535)	4.8 (.189)	S17-825-CW A

Ordering example for a complete tool, boring range 5.906-8.464 inch, including adapter C6, slide, fine boring head, counterweight and cartridge for TP... inserts:

1 piece C8-R825S17-FJ340A (adapter)
1 piece S17-R825A34-020 A (slide)
1 piece A34-R825C-E 017 A (fine boring head)
1 piece R825C-AF23STUP1103A (cartridge)
1 piece S17-825-CW A (counterweight)

Tightening torques

Coromant Capto® C8:	180	Nm	133	ft-lbs
For slide + counterweight:	75	Nm	55	ft-lbs
For fine boring head:	16	Nm	12	ft-lbs
For cartridge screw:	6	Nm	4.4	ft-lbs
For locking screw:	6	Nm	4.4	ft-lbs
For insert screw (TC/TP..22):	0.9	Nm	.7	ft-lbs
For insert screw (CC..3(2.5)):	3	Nm	2.2	ft-lbs

CoroBore® 825

Precision adjustment with vernier scale (0.002 mm (.00008") on dia.)

One full turn of the scale will change dia. by 0.5 mm (0.020")

Adjustable radial stroke on fine boring head 7.5 mm (.295")

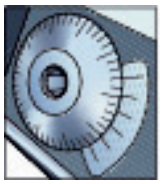

CoroBore® 826

Precision adjustment with click on each increment (0.002 mm (.00008") on dia.)

One full turn of the scale will change dia. by 0.1 mm (0.0039")

Adjustable radial stroke on fine boring head 0.5 mm (.020")

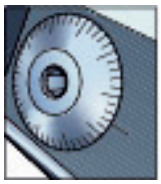

CoroBore® 825 XL/CoroBore® 826 XL

Boring range 298 - 564.6 mm (11.732 - 22.228 inch)

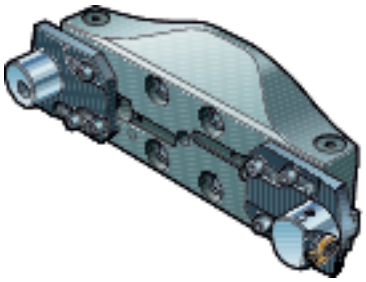

Internal

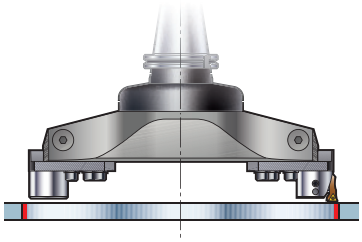

External

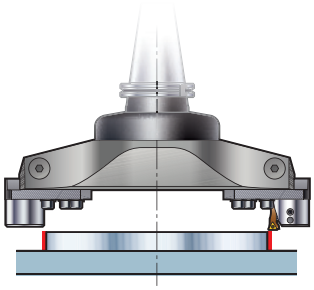

Boring range	298-564.6 mm (11.732-22.228 inch)
Hole tolerance	IT6
Dia. adjustment	0.002 mm (.00008 inch)
Cutting fluid	Internal
Cutting speed, v_c max:	1200 m/min (3937 ft/min)

Always adjust from center towards periphery

Boring range, mm (inch)[1]									1. Cartridge	2. Fine boring head
Internal D_{ci}[3] min-max Fine boring head		**External D_{co}[4] min-max** Fine boring head		Bridge size	Entering angle κ_r	Lead angle	Insert type[2]			
CB825	CB826	CB825	CB826				ISO	ANSI	**Ordering code**	**Ordering code**
298-395	298-380	173-270	188-270	M	92°	-2°	TP...11	TP...22	R825C-AF23STUP1103A	A34-R825C-E 017 A
(11.732-15.551)	(11.732-14.961)	(6.811-10.630)	(7.402-10.630)		92°	-2°	TC...1103	TC...22	R825C-AF23STUC1103A	A34-R826C-E 017
					95°	-5°	CC...09	CC...3(2.5)	R825C-AF27SCLC09T3	
378-475	378-460	253-350	268-350	N	92°	-2°	TP...11	TP...22	R825C-AF23STUP1103A	A34-R825C-E 017 A
(14.882-18.701)	(14.88218.110)	(9.961-13.780)	(10.551-13.780)		92°	-2°	TC...1103	TC...22	R825C-AF23STUC1103A	A34-R826C-E 017
					95°	-5°	CC...09	CC...3(2.5)	R825C-AF27SCLC09T3	
458-555	458-540	333-430	348-430	O	92°	-2°	TP...11	TP...22	R825C-AF23STUP1103A	A34-R825C-E 017 A
(18.031-21.850)	(18.031-21.260)	(13.110-16.929)	(13.701-16.929)		92°	-2°	TC...1103	TC...22	R825C-AF23STUC1103A	A34-R826C-E 017
					95°	-5°	CC...09	CC...3(2.5)	R825C-AF27SCLC09T3	

1) Dimensions are given for inserts with 0.4 mm (.016 inch) nose radius.
2) Inserts are ordered separately.
3) D_{ci} max - min are changed +9.6 mm (.378 inch) when using slide extensions
4) D_{co} max - min are changed -9.6 mm (.378 inch) when using slide extensions
5) For R825C-AF27SCLC09T3, increase l1 and l3 by 4 mm (.157 inch)
6) The bridge's machine side interface matches the spindle nose on machines with taper size 50
7) Stop plate set for quick and easy change from finishing slide to roughing slide with retained slide position. If switching from roughing to finishing slide, the diameter needs to be reduced on the fine boring head, followed by a measurement cut.

Assembly with bridge sizes M, N and O

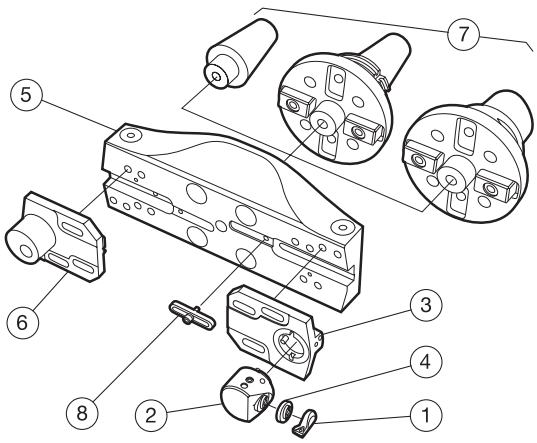

1. Cartridge
2. Fine boring head
3. Slide
4. Slide extension
5. Bridge
6. Counterweight
7. Holders
8. Stop plate set

F59 G6 F114 F90 F2 J2

SANDVIK Coromant

Assembly with bridge sizes M, N and O

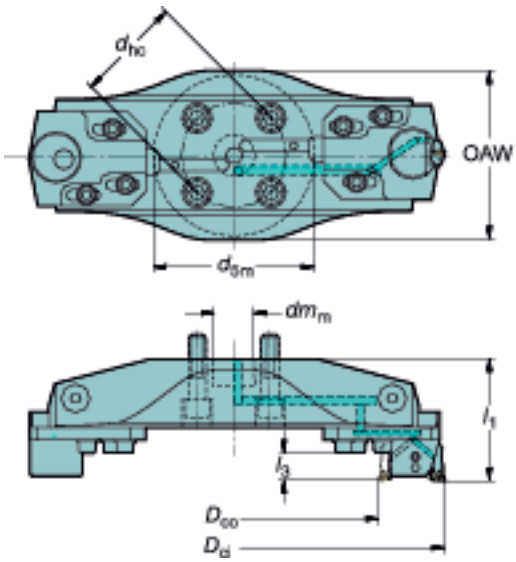

92° (-2°) CoroTurn® 107
R825C-AFxxSTUC

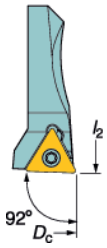

92° (-2°) CoroTurn® 111
R825C-AFxxSTUP

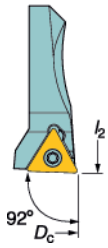

95° (-5°) CoroTurn® 107
R825C-AF27SCLC

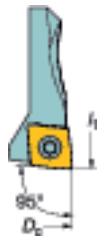

Slide extension set

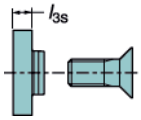

6. Counterweight Ordering code	8. Stop plate set[7] Ordering code
S24-825XL-CW	5335 001-01

3. Slide Ordering code	4. Slide extension Ordering code	5. Bridge[6] Ordering code	Dimensions, mm (inch) kg	l_1[5]	D_{5m}	OAW	dm_m	d_{hc}	l_3	l_{3s}	7. Holders Ordering code
S24-R825XLA34-012	825C-048A	A40-RXLS24-AM2 062	8.4	114	160	164	40	101.6	28	4.8	392.644XL-5040 075
				(4.488)	(6.299)	(6.457)	(1.575)	(4.000)	(1.102)	(.189)	392.646XL-5040 080
											A392.645XL-5040 075
S24-R825XLA34-012	825C-048A	A40-RXLS24-AN2 067	10.2	119	160	164	40	101.6	28	4.8	C8-391.XL-40 065
				(4.685)	(6.299)	(6.457)	(1.575)	(4.000)	(1.102)	(.189)	C10-391.XL-40 070
											392.647XL-5040
S24-R825XLA34-012	825C-048A	A40-RXLS24-AO2 072	12.1	124	160	164	40	101.6	28	4.8	A392.647XL-5040
				(4.882)	(6.299)	(6.457)	(1.575)	(4.000)	(1.102)	(.189)	See page F46.

Ordering example for a complete tool for diameter 11.732-15.551 inch (valid for bridge sizes M, N and O) including holder:

1 piece R825-AF23STUC1103A (cartridge)
1 piece A34-R825C-E 017 A (fine boring head)
1 piece S24-R825XLA34-012 (extension slide)
1 piece A40-RXLS24-AM2 062 (bridge)
1 piece S24-825XL-CW (counterweight)
1 piece 392.644XL-5040 075 (holder)

Tightening torques

For bridge:	200	Nm	148	ft-lbs
For slide + counterweight:	60	Nm	44	ft-lbs
For fine boring head:	16	Nm	12	ft-lbs
For cartridge screw:	6	Nm	4.4	ft-lbs
For locking screw:	6	Nm	4.4	ft-lbs
For insert screw TC..22/TP..22:	0.9	Nm	.7	ft-lbs
For insert screw CC..3(2.5):	3	Nm	2.2	ft-lbs

CoroBore® 825 XL

Precision adjustment with vernier scale (0.002 mm (.00008") on dia.)

One full turn of the scale will change dia. by 0.5 mm (0.020")

Adjustable radial stroke on fine boring head 7.5 mm (.295")

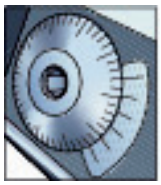

CoroBore® 826 XL

Precision adjustment with click on each increment (0.002 mm (.00008") on dia.)

One full turn of the scale will change dia. by 0.1 mm (0.0039")

Adjustable radial stroke on fine boring head 0.5 mm (.020")

CoroBore® 825 XL/CoroBore® 826 XL

Boring range 538 - 1284.6 mm (21.181 - 50.575 inch)

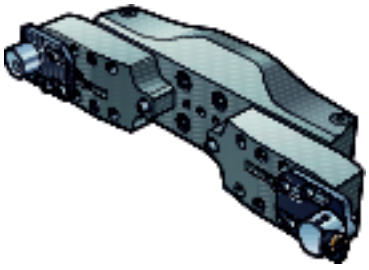

Internal

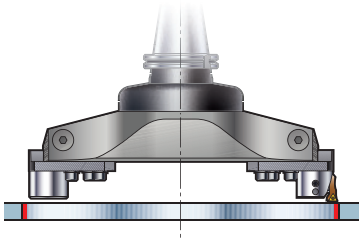

External

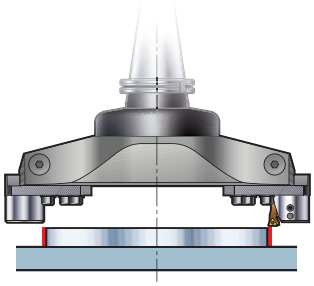

Boring range	538-1284.6 mm (21.181-50.575 inch)
Hole tolerance	IT6
Dia. adjustment	0.002 mm (.00008 inch)
Cutting fluid	Internal
Cutting speed, v_c max: 1200 m/min (3937 ft/min)	
Always adjust from center towards periphery	

Boring range, mm (inch)[1]									1. Cartridge	2. Fine boring head
Internal D_{ci}[3] min-max Fine boring head		**External D_{co}[4] min-max** Fine boring head					Insert type[2]			
CB825	CB826	CB825	CB826	Bridge size	Entering angle κ_r	Lead angle	ISO	ANSI	**Ordering code**	**Ordering code**
538-795	538-780	413-670	428-670	P	92°	-2°	TP...11	TP...22	R825C-AF23STUP1103A	A34-R825C-E 017 A
(21.181-31.299)	(21.181-30.709)	(16.260-26.378)	(16.850-26.378)		92°	-2°	TC...1103	TC...22	R825C-AF23STUC1103A	A34-R826C-E 017
					95°	-5°	CC...09	CC...3(2.5)	R825C-AF27SCLC09T3	
778-1035	778-1020	653-910	668-910	Q	92°	-2°	TP...11	TP...22	R825C-AF23STUP1103A	A34-R825C-E 017 A
(30.630-40.748)	(30.630-40.157)	(25.709-35.827)	(26.299-35.827)		92°	-2°	TC...1103	TC...22	R825C-AF23STUC1103A	A34-R826C-E 017
					95°	-5°	CC...09	CC...3(2.5)	R825C-AF27SCLC09T3	
1018-1275	1018-1260	893-1150	908-1150	R	92°	-2°	TP...11	TP...22	R825C-AF23STUP1103A	A34-R825C-E 017 A
(40.079-50.197)	(40.079-49.606)	(35.157-45.276)	(35.748-45.276)		92°	-2°	TC...1103	TC...22	R825C-AF23STUC1103A	A34-R826C-E 017
					95°	-5°	CC...09	CC...3(2.5)	R825C-AF27SCLC09T3	

1) Dimensions are given for inserts with 0.4 mm (.016 inch) nose radius.
2) Inserts are ordered separately.
3) D_{ci} max - min are changed +9.6 mm (.378 inch) when using slide extensions
4) D_{co} max - min are changed -9.6 mm (.378 inch) when using slide extensions
5) For R825C-AF27SCLC09T3, increase l1 and l3 by 4 mm (.157 inch)
6) The bridge's machine side interface matches the spindle nose on machines with taper size 50
7) Stop plate set for quick and easy change from finishing slide to roughing slide with retained slide position. If switching from roughing to finishing slide, the diameter needs to be reduced on the fine boring head, followed by a measurement cut.

Assembly with bridge sizes P, Q and R

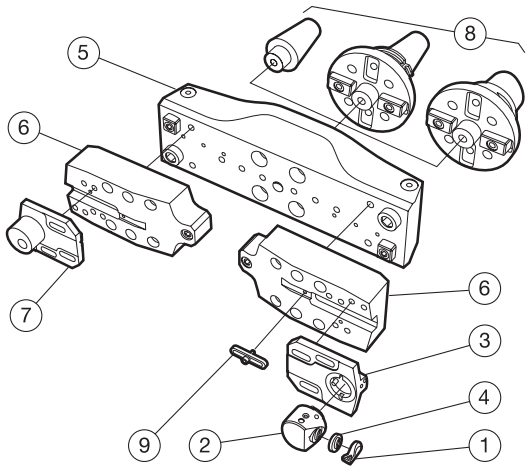

1. Cartridge
2. Fine boring head
3. Slide
4. Slide extension
5. Bridge
6. Bridge extension
7. Counterweight
8. Holders
9. Stop plate set

F59

G6

F114
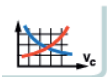
F90

F2

J2

SANDVIK Coromant

Assembly with bridge sizes P, Q and R

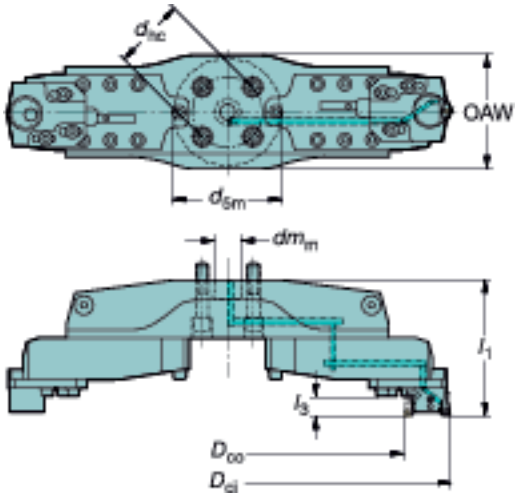

92° (-2°) CoroTurn® 107
R825C-AFxxSTUC

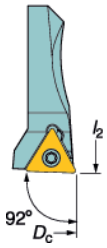

92° (-2°) CoroTurn® 111
R825C-AFxxSTUP

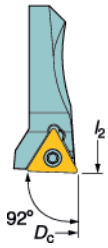

95° (-5°) CoroTurn® 107
R825C-AF27SCLC

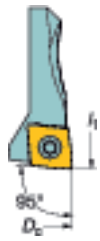

Slide extension set

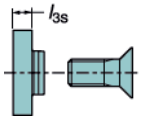

7. Counterweight Ordering code	9. Stop plate set[7] Ordering code
S24-825XL-CW	5335 001-01

3. Slide Ordering code	4. Slide extension Ordering code	5. Bridge[6] Ordering code	6. Bridge extension Ordering code	Dimensions, mm (inch)								8. Holders Ordering code
				kg	l_1[5]	D_{5m}	OAW	dm_m	d_{hc}	l_3	l_{3s}	
S24-R825XLA34-012	825C-048A	A40-NXLA35-AP2 086	A35-RXLS24-A 060	24.5	198	160	164	40	101.6	28	4.8	392.644XL-5040 075
					(7.795)	(6.299)	(6.457)	(1.575)	(4.000)	(1.102)	(.189)	392.646XL-5040 080
												A392.645XL-5040 075
S24-R825XLA34-012	825C-048A	A40-NXLA35-AQ2 106	A35-RXLS24-A 060	35.7	218	160	164	40	101.6	28	4.8	C10-391.XL-40 070
					(8.583)	(6.299)	(6.457)	(1.575)	(4.000)	(1.102)	(.189)	392.647XL-5040
												A392.647XL-5040
S24-R825XLA34-012	825C-048A	A40-NXLA35-AR2 106	A35-RXLS24-A 060	42.9	218	160	164	40	101.6	28	4.8	See page F46.
					(8.583)	(6.299)	(6.457)	(1.575)	(4.000)	(1.102)	(.189)	

Ordering example for a complete tool for diameter 538-795 mm (valid for bridge size P, Q and R) including holder:

1 piece R825-AF23STUC1103A (cartridge)
1 piece A34-R825C-E 017 A (fine boring head)
1 piece S24-R825XLA34-012 (extension slide)
1 piece A40-NXLA35-AP2 086 (bridge)
2 pieces A35-RXLS24-A 060 (bridge extension)
1 piece S24-825XL-CW (counterweight)
1 piece 392.644XL-5040 075 (holder)

Tightening torques

For bridge:	200	Nm	148	ft-lbs
For bridge extension:	100	Nm	74	ft-lbs
For slide + counterweight:	60	Nm	44	ft-lbs
For fine boring head:	16	Nm	12	ft-lbs
For cartridge screw:	6	Nm	4.4	ft-lbs
For locking screw:	6	Nm	4.4	ft-lbs
For insert screw TC..22/TP..22:	0.9	Nm	.7	ft-lbs
For insert screw CC..3(2.5):	3	Nm	2.2	ft-lbs

CoroBore® 825 XL

Precision adjustment with vernier scale (0.002 mm (.00008") on dia.)

One full turn of the scale will change dia. by 0.5 mm (0.020")

Adjustable radial stroke on fine boring head 7.5 mm (.295")

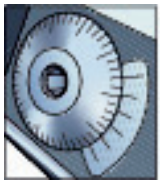

CoroBore® 826 XL

Precision adjustment with click on each increment (0.002 mm (.00008") on dia.)

One full turn of the scale will change dia. by 0.1 mm (0.0039")

Adjustable radial stroke on fine boring head 0.5 mm (.020")

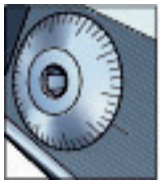

Application areas for CoroBore XL holders

CoroBore® XL

		CoroBore XL bridge sizes M, N and O			CoroBore XL bridge size P			CoroBore XL bridge sizes Q and R		
		Roughing	Semi-finishing	Finishing	Roughing	Semi-finishing	Finishing	Roughing	Semi-finishing	Finishing
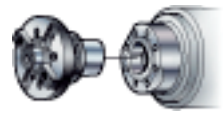	C8 directly clamped in Coromant Capto spindle	•••	•••	•••	••	•••	•••			
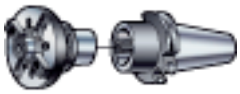	C8 mounted in basic holder (with center screw)	••	•••	•••		•	••			
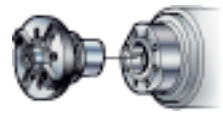	C10 directly clamped in Coromant Capto spindle	•••	•••	•••	•••	•••	•••	•[1]	•••	•••
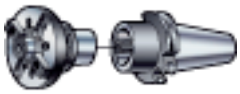	C10 mounted in basic holder (with center screw)	•••	•••	•••	••	•••	•••		••[1]	•••
	Solid holder	•••	•••	•••	••	•••	•••		••[1]	•••
	Centering plug	•••	•••	•••	•••	•••	•••	•[1]	•••	•••

[1] Single edge boring recommended

••• Very good
•• Good
• Fair

SANDVIK Coromant

Coromant Capto adapter for CoroBore XL

Cx-391.XL

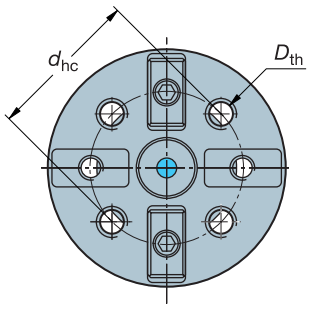

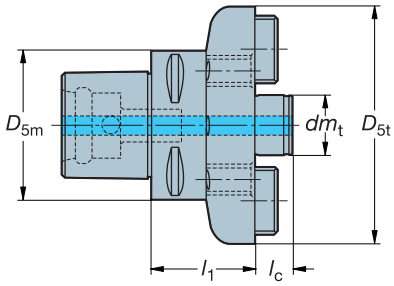

l_1 = programming length

Coupling size	Ordering code	Coolant[1]	Dimensions, mm, inch D_{5m}	dm_t	d_{hc}	D_{5t}	l_1	D_{th}	l_c	kg
C8	**C8-391.XL-40 065**	1	80	40	101.6	160	65	M16	25	6.7
			3.150	*1.575*	*4.000*	*6.299*	*2.559*		*0.984*	*6.7*
C10	**C10-391.XL-40 070**	1	100	40	101.6	160	70	M16	25	8.3
			3.937	*1.575*	*4.000*	*6.299*	*2.756*		*0.984*	*8.3*

[1] 0 = no coolant, 1 = coolant through center, 6 = coolant through flange, 7 = coolant through center and through flange

J2

F117

Adapter for CoroBore XL

Solid holders

392.644XL
392.646XL
A392.645XL

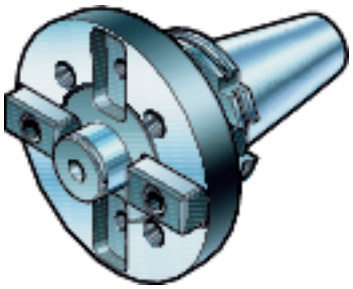

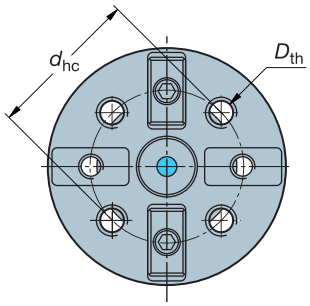

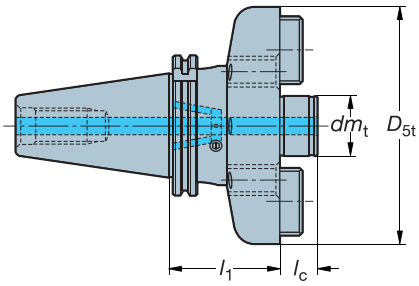

Metric version

Machine design	Taper	**Ordering code**	Coolant[1]	Dimensions dm_t	d_{hc}	D_{5t}	l_1	D_{th}	l_c	KG
ISO7388.1	50	**392.644XL-5040 075**	7	40	101.6	160	75	M16	25	8.5
MAS/BT403	50	**392.646XL-5040 080**	7	40	101.6	160	80	M16	25	8.9

1) 0 = no coolant, 1 = coolant through center, 6 = coolant through flange, 7 = coolant through center and through flange

Inch version

Machine design	Taper	**Ordering code**	Coolant[1]	Dimensions dm_t	d_{hc}	D_{5t}	l_1	D_{th}	l_c	Lbs
CAT V-Flange	50	**A392.645XL-5040 075**	7	1.575	4.000	6.299	2.953	M16	0.984	18.1

1) 0 = no coolant, 1 = coolant through center, 6 = coolant through flange, 7 = coolant through center and through flange

All CoroBore XL solid holders have ground backside of flange and threads for the option to mount a shim to increase stability if needed. Shim needs to be ordered separately and ground to fit the specific machine and holder, see accessories page F117.

J2 F117

SANDVIK Coromant

Adapter for CoroBore XL

Centering plug

392.647XL
A392.647XL

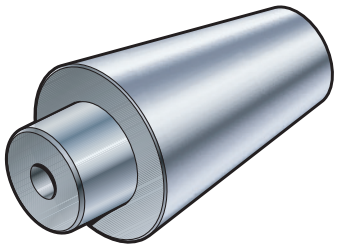

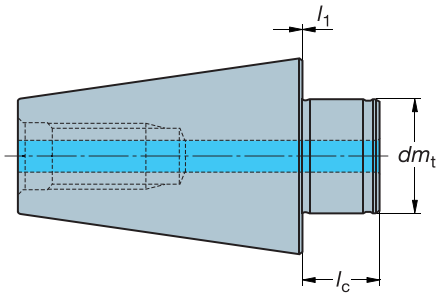

Mounting of bridge

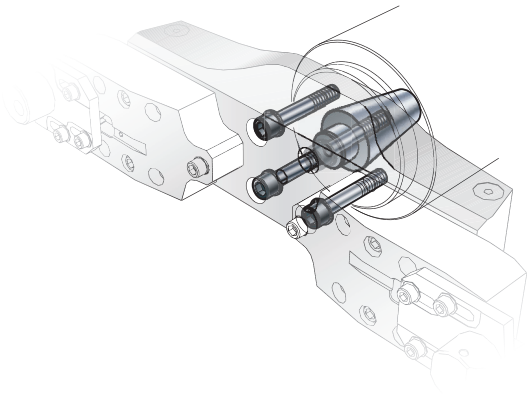

l_1 = programming length

Metric version

Machine design	Taper	**Ordering code**	Coolant[1]	Dimensions dm_t	l_1	l_c	KG
ISO7388.1/MAS-BT 403	50	**392.647XL-5040**	1	40	0	25	1.9

1) 0 = no coolant, 1 = coolant through center, 6 = coolant through flange, 7 = coolant through center and through flange

Inch version

Machine design	Taper	**Ordering code**	Coolant[1]	Dimensions dm_t	l_1	l_c	Lbs
CAT V-Flange	50	**A392.647XL-5040**[2]	1	1.575	.000	0.984	4.2

1) 0 = no coolant, 1 = coolant through center, 6 = coolant through flange, 7 = coolant through center and through flange
2) Screws with inch threads have to be ordered separately, see accessories page F117.

J2 F117

Fine boring head

Coromant Capto® /HSK

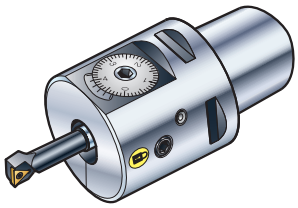

Boring range:	3-36 mm (.118-1.417 inch)
Boring depth:	109 mm (4.29 inch)
Hole tolerance:	IT6
Diameter adjustment:	0.002 mm (.00008 inch)
Cutting fluid:	Internal

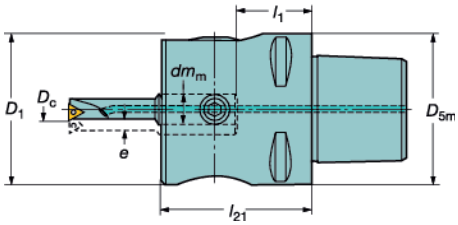

l_1 = programming length

Boring diameter mm (inch) D_c min – max	Coupling size	Ordering code	Dimensions, mm (inch) Weight	dm_m	D_{5m}	D_1	l_1	l_{21}	e_{max}
		Coromant Capto®							
3–26	C4	**C4-391.37A-12 055B**	0.6	12	40	50	31	55	3
(.118-1.024)			*1.3*	*.472*	*1.575*	*1.969*	*1.220*	*2.165*	*.118*
3–26	C5	**C5-391.37A-12 048B**	0.8	12	50	50	24	48	3
(.118-1.024)			*1.8*	*.472*	*1.969*	*1.969*	*.945*	*1.890*	*.118*
3–32		**C5-391.37A-16 070A**	1.4	16	50	63	11	70	3
(.118-1.260)			*3.1*	*.630*	*1.969*	*2.480*	*.433*	*2.756*	*.118*
3–36		**C5-391.37A-20 085A**	2.6	20	50	80	13	85	5
(.118-1.417)			*5.7*	*.787*	*1.969*	*3.150*	*.512*	*3.346*	*.197*
3–32	C6	**C6-391.37A-16 075A**	1.6	16	63	63	16	75	3
(.118-1.260)			*3.5*	*.630*	*2.480*	*2.480*	*.630*	*2.953*	*.118*
3–36		**C6-391.37A-20 085A**	2.8	20	63	80	13	85	5
(.118-1.417)			*6.2*	*.787*	*2.480*	*3.150*	*.512*	*3.346*	*.197*
		HSK							
3–26	HSK 63-A/C	**392.410 37A-63 12 063B**	1.6	12	63	50	39	63	3
(.118-1.024)			*3.5*	*.472*	*2.480*	*1.969*	*1.535*	*2.480*	*.118*
3–32		**392.410 37A-63 16 085A**	1.8	16	63	63	26	85	3
(.118-1.260)			*4.0*	*.630*	*2.480*	*2.480*	*1.024*	*3.346*	*.118*
3–36		**392.410 37A-63 20 100A**	3.0	20	63	80	28	100	5
(.118-1.417)			*6.6*	*.787*	*2.480*	*3.150*	*1.102*	*3.937*	*.197*
3–26	HSK 100-A/C	**392.410 37A-100 12 076B**	2.7	12	100	50	52	76	3
(.118-1.024)			*5.9*	*.472*	*3.937*	*1.969*	*2.047*	*2.992*	*.118*

Sleeves for fine boring heads type 391.37A

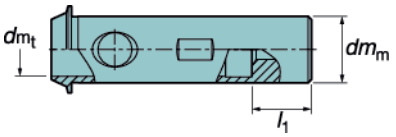

dm_t	Ordering code	Dimensions, mm (inch) dm_m	l_1
16	**393.37A-20 16 072**	20	18
.630		*.787*	*.709*
16	**393.37A-25 16 088**	25	38
.630		*.984*	*1.496*

Warning: Follow handling instructions in the boxes.

Max rotation speed:

dm_m 12 mm (.472 inch)= 7000 RPM
dm_m 16 mm (.630 inch)= 5000 RPM
dm_m 20 mm (.787 inch)= 3500 RPM

Tightening torques

Coromant Capto®
C4= 40-50 Nm (30-37 lbf-ft)
C5= 90-100 Nm (67-74 lbf-ft)
C6= 160-180 Nm (118-133 lbf-ft)
Screw for boring bar:
dm_m 12 & 16 mm (.472 & .630 inch)= 10 Nm (7 lbf-ft)
dm_m 20 mm (.787 inch)= 18 Nm (13 lbf-ft)
Locking screw:
dm_m 12 & 16 mm (.472 & .630 inch)= 8 Nm (6 lbf-ft)
dm_m 20 mm (.787 inch)= 12 Nm (9 lbf-ft)

G6

F118
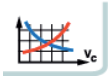
F90

F2

SANDVIK Coromant

High speed fine boring head

With adjustable counterweight

Coromant Capto® / HSK

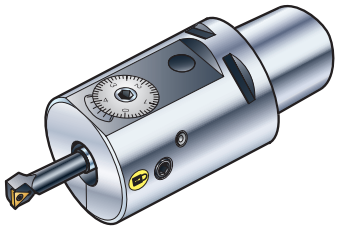

Boring range:	3-26 mm (.118-1.024 inch)
Boring depth:	≤ 60 mm (2.362 inch)
Hole tolerance:	IT6
Diameter adjustment:	0.002 mm (.00008 inch)
Cutting fluid:	Internal
Max rotation speed:	20 000 rev/min

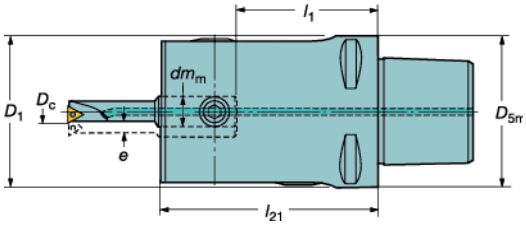

l_1 = programming length

Boring diameter mm (inch) D_c min – max	Coupling size	Ordering code	Dimensions, mm (inch) Weight	dm_m	D_{5m}	D_1	l_1	l_{21}	e_{max}
		Coromant Capto®							
3–26	C5	**C5-391.37B-12 070B**	1.0	12	50	50	46	70	3
.118–1.024			*2.2*	*.472*	*1.969*	*1.969*	*1.811*	*2.756*	*.118*
		HSK							
3–26	HSK 63-A/C	**392.410 37B-63 12 090B**	1.4	12	63	50	66	90	3
.118–1.024			*3.1*	*.472*	*2.480*	*1.969*	*2.598*	*3.543*	*.118*

G6 F118 F90 F2

Boring bars for fine boring head

Boring bar R429

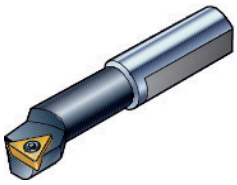

R429.90/R429U

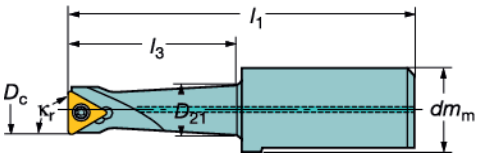

R429.91

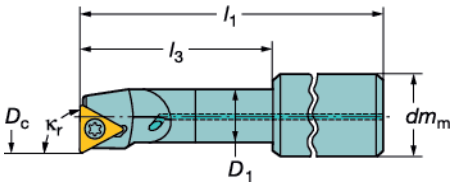

l_1 = programming length

Boring diameter[1] mm (inch) D_c min – max	Max. boring depth l_3	Ordering code	Dimensions, mm (inch) Weight	dm_m	D_1	D_{21}	l_1	λ°		Entering angle κ_r Lead angle	Insert type[2][5]
		Steel bar									
8.0 – 14.0	24	**R429.90-08-024-06-AB**	0.02	12	–	7.4	50	–12	–	90°	TC..06
.315 – .551	*.945*		*.044*	*.472*		*.291*	*1.969*			*0°*	*TC.. 5/32*
11.0 – 17.0	33	**R429.90-11-033-06-AC**	0.03	12	–	10.4	59	–9	+	90°	TC..06
.433 – .669	*1.299*		*.066*	*.472*		*.409*	*2.323*			*0°*	*TC.. 5/32*
14.0 – 20.0	40	**R429.90-14-040-09-AC**	0.04	12	–	11.2	65	–8	+	90°	TC..09
.551 – .787	*1.575*		*.088*	*.472*		*.441*	*2.559*			*0°*	*TC.. 7/32*
17.0 – 23.0	40	**R429.90-17-040-09-AC**	0.04	12	–	11.0	65	–6	+	90°	TC..09
.669 – .906	*1.575*		*.088*	*.472*		*.433*	*2.559*			*0°*	*TC.. 7/32*
20.0 – 26.0	40	**R429.90-20-040-09-AC**	0.04	12	–	11.0	65	–6	+	90°	TC..09
.787 – 1.024	*1.575*		*.088*	*.472*		*.433*	*2.559*			*0°*	*TC.. 7/32*
8.0 – 14.0	24	**R429U-A08-024TP06A**	0.02	12	–	7.4	50	–8	+	92°	TP..06
.315 – .551	*.945*		*.044*	*.472*		*.291*	*1.969*			*-2°*	*TP.. 5/32*
11.0 – 17.0	33	**R429U-A11-033TP06A**	0.03	12	–	10.4	59	–5	+	92°	TP..06
.433 – .669	*1.299*		*.066*	*.472*		*.409*	*2.323*			*-2°*	*TP.. 5/32*
14.0 – 20.0	40	**R429U-A14-040TP09A**	0.04	12	–	11.2	65	–4	+	92°	TP..09
.551 – .787	*1.575*		*.088*	*.472*		*.441*	*2.559*			*-2°*	*TP.. 7/32*
17.0 – 23.0	40	**R429U-A17-040TP09A**	0.04	12	–	11.0	65	–2	+	92°	TP..09
.669 – .906	*1.575*		*.088*	*.472*		*.433*	*2.559*			*-2°*	*TP.. 7/32*
20.0 – 26.0	40	**R429U-A20-040TP09A**	0.04	12	–	11.0	65	–2	+	92°	TP..09
.787 – 1.024	*1.575*		*.088*	*.472*		*.433*	*2.559*			*-2°*	*TP.. 7/32*
8.0 – 14.0	40	**R429U-A12-08040TP06A**	0.03	12	–	7.4	66	–8	+	92°	TP..06
.315 – .551	*1.575*		*.066*	*.472*		*.291*	*2.598*			*-2°*	*TP.. 5/32*
11.0 – 17.0	55	**R429U-A12-11055TP06A**	0.04	12	–	10.4	81	–5	+	92°	TP..06
.433 – .669	*2.165*		*.088*	*.472*		*.409*	*3.189*			*-2°*	*TP.. 5/32*
14.0 – 20.0	60	**R429U-A12-14060TP09A**	0.06	12	–	11.6	86	–4	+	92°	TP..09
.551 – .787	*2.362*		*.132*	*.472*		*.457*	*3.386*			*-2°*	*TP.. 7/32*
17.0 – 23.0	60	**R429U-A12-17060TP09A**	0.06	12	–	11.6	86	–2	+	92°	TP..09
.669 – .906	*2.362*		*.132*	*.472*		*.457*	*3.386*			*-2°*	*TP.. 7/32*
20.0 – 26.0	60	**R429U-A12-20060TP09A**	0.07	12	–	11.6	86	–2	+	92°	TP..09
.787 – 1.024	*2.362*		*.154*	*.472*		*.457*	*3.386*			*-2°*	*TP.. 7/32*
8.0 – 14.0	40	**R429U-A16-08040TP06A**	0.10	16	–	7.4	101	–8	+	92°	TP..06
.315 – .551	*1.575*		*.220*	*.630*		*.291*	*3.976*			*-2°*	*TP.. 5/32*
11.0 – 17.0	55	**R429U-A16-11055TP06A**	0.11	16	–	10.4	116	–5	+	92°	TP..06
.433 – .669	*2.165*		*.243*	*.630*		*.409*	*4.567*			*-2°*	*TP.. 5/32*
14.0 – 20.0	70	**R429U-A16-14070TP09A**	0.12	16	–	11.6	131	–4	+	92°	TP..09
.551 – .787	*2.756*		*.265*	*.630*		*.457*	*5.157*			*-2°*	*TP.. 7/32*
17.0 – 23.0	80	**R429U-A16-17080TP09A**	0.13	16	–	15.6	141	–2	+	92°	TP..09
.669 – .906	*3.150*		*.287*	*.630*		*.614*	*5.551*			*-2°*	*TP.. 7/32*
20.0 – 26.0	80	**R429U-A16-20080TP09A**	0.13	16	–	15.6	141	–2	+	92°	TP..09
.787 – 1.024	*3.150*		*.287*	*.630*		*.614*	*5.551*			*-2°*	*TP.. 7/32*
23.0 – 29.0	80	**R429U-A16-23080TP09A**	0.14	16	–	15.6	141	0	+	92°	TP..09
.906 – 1.142	*3.150*		*.309*	*.630*		*.614*	*5.551*			*-2°*	*TP.. 7/32*
26.0 – 32.0	80	**R429U-A16-26080TP09A**	0.14	16	–	15.6	141	0	+	92°	TP..09
1.024 – 1.260	*3.150*		*.309*	*.630*		*.614*	*5.551*			*-2°*	*TP.. 7/32*

Continued...

1) With insert radius r_ε = 0.2 mm (.0079 inch)
2) Use insert radius r_ε = 0.4 mm (.0157 inch)
3) Solid bar with ground geometry.
4) When using sleeves the boring range is $D_{c\,min}$ + 10 mm (.394 inch)
5) TC..x = CoroTurn® 107
TP..x = CoroTurn® 111

Tightening torques for insert screws
Size:
06 (5/32) = 0.6 Nm (.44 lbf-ft)
09 (7/32) = 0.8 Nm (.59 lbf-ft)
11 (1/4) = 0.9 Nm (.66 lbf-ft)

G6

F118
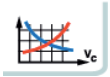
F90

F2

Boring bars for fine boring head

Boring bar R429

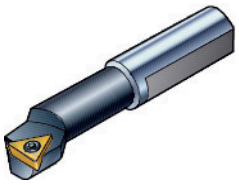

R429.90/R429U

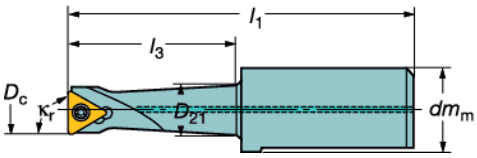

R429.91

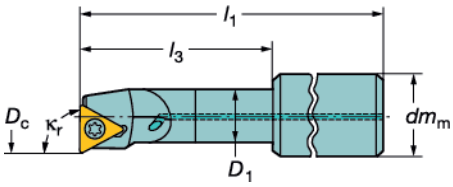

Continued...

l_1 = programming length

Boring diameter[1] mm (inch) D_c min – max	Max. boring depth l_3	Ordering code	Dimensions, mm (inch) Weight	dm_m	D_1	D_{21}	l_1	λ°		Entering angle κ_r Lead angle	Insert type[2][5]
8.0 – 14.0[4]	28	R429U-A16-08028TC06A	0.10	16	–	7.4	89	–12	+	92°	TC...06
.315 – .551	1.102		.220	.630		.291	3.504			-2°	TC.. 5/32
11.0 – 17.0[4]	39	R429U-A16-11039TC06A	0.11	16	–	10.4	100	–9	+	92°	TC...06
.433 – .669	1.535		.243	.630		.409	3.937			-2°	TC.. 5/32
14.0 – 20.0[4]	49	R429U-A16-14049TC09A	0.13	16	–	13.4	110	–8	+	92°	TC...09
.551 – .787	1.929		.287	.630		.528	4.331			-2°	TC.. 7/32
17.0 – 23.0[4]	56	R429U-A16-17056TC09A	0.16	16	–	15.6	117	–6	+	92°	TC...09
.669 – .906	2.205		.353	.630		.614	4.606			-2°	TC.. 7/32
20.0 – 26.0[4]	56	R429U-A16-20056TC09A	0.16	16	–	15.6	117	–6	+	92°	TC...09
.787 – 1.024	2.205		.353	.630		.614	4.606			-2°	TC.. 7/32
23.0 – 29.0[4]	56	R429U-A16-23056TC09A	0.16	16	–	15.6	117	–4	+	92°	TC...09
.906 – 1.142	2.205		.353	.630		.614	4.606			-2°	TC.. 7/32
26.0 – 32.0[4]	56	R429U-A16-26056TC09A	0.16	16	–	15.6	117	–2	+	92°	TC...09
1.024 – 1.260	2.205		.353	.630		.614	4.606			-2°	TC.. 7/32
17.0 – 27.0[4]	60	R429U-A20-17060TC09A	0.24	20	–	16.4	134	–6	+	92°	TC...09
.669 – 1.063	2.362		.529	.787		.646	5.276			-2°	TC.. 7/32
20.0 – 30.0[4]	70	R429U-A20-20070TC09A	0.27	20	–	19.4	144	–6	+	92°	TC...09
.787 – 1.181	2.756		.595	.787		.764	5.669			-2°	TC.. 7/32
23.0 – 33.0[4]	70	R429U-A20-23070TC09A	0.28	20	–	19.6	144	–4	+	92°	TC...09
.906 – 1.299	2.756		.617	.787		.772	5.669			-2°	TC.. 7/32
26.0 – 36.0[4]	70	R429U-A20-26070TC09A	0.28	20	–	19.6	144	–2	+	92°	TC...09
1.024 – 1.417	2.756		.617	.787		.772	5.669			-2°	TC.. 7/32
		Carbide bar									
3.0 – 9.0	13.5	R429.90-03-013-01-CB H10F	0.02	12	–	2.6	40	0	+	90°	–[3]
.118 – .354	.531		.044	.472		.102	1.575			0°	–[3]
5.0 – 11.0	21	R429.90-05-021-02-CB H10F	0.02	12	–	4.0	48	0	+	90°	–[3]
.197 – .433	.827		.044	.472		.157	1.890			0°	–[3]
3.0 – 9.0	15	R429U-E16-0301501A	0.08	16	–	2.6	76	0	+	90°	–[3]
.118 – .354	.591		.176	.630		.102	2.992			0°	–[3]
5.0 – 11.0	25	R429U-E16-0502502A	0.08	16	–	4.0	86	0	+	90°	–[3]
.197 – .433	.984		.176	.630		.157	3.386			0°	–[3]
9.0 – 15.0	49	R429.91-06-049-06-AA	0.10	16	6.0	–	90	–10	+	91°	TC..06
.354 – .591	1.929		.220	.630	.236		3.543			-1°	TC.. 5/32
11.8 – 17.8	59	R429.91-08-059-06-AA	0.10	16	8.0	–	100	–6	+	91°	TC..06
.465 – .701	2.323		.220	.630	.315		3.937			-1°	TC.. 5/32
14.0 – 20.0	79	R429.91-10-079-09-AA	0.20	16	10.0	–	120	–8	+	91°	TC..09
.551 – .787	3.110		.441	.630	.394		4.724			-1°	TC.. 7/32
18.0 – 24.0	99	R429.91-12-099-09-AA	0.30	16	12.0	–	140	–6	+	91°	TC..09
.709 – .945	3.898		.661	.630	.472		5.512			-1°	TC.. 7/32
22.0 – 28.0	109	R429.91-16-109-11-AA	0.40	16	16.0	–	150	–4	+	91°	TC..1102
.866 – 1.102	4.291		.882	.630	.630		5.906			-1°	TC..2(1.5)

1) With insert radius r_ε = 0.2 mm (.0079 inch)
2) Use insert radius r_ε = 0.4 mm (.0157 inch)
3) Solid bar with ground geometry.
4) When using sleeves the boring range is $D_{c\,min}$ + 10 mm (.394 inch)
5) TC..x = CoroTurn® 107
TP..x = CoroTurn® 111

Continued...

Tightening torques for insert screws
Size:
06 (5/32) = 0.6 Nm (.44 lbf-ft)
09 (7/32) = 0.8 Nm (.59 lbf-ft)
11 (1/4) = 0.9 Nm (.66 lbf-ft)

G6 F118 F90 F2

Cartridges for boring tool 391.38A/39A

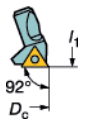

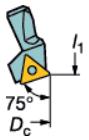

Entering angle:	95°	92°	92°	75°
Lead angle:	-5°	-2°	-2°	15°

		Insert type[1]			Ordering code
Entering angle κ_r	Lead angle	ISO	ANSI	*iC*	**Cartridge**
92°	-2°	CC...06	CC...2(1.5)	1/4	**391.38A-1-C06A**
92°	-2°	TC...09	TC...1.8(1.5)	7/32	**391.38A-1-T09A**
92°	-2°	TC...09	TC...1.8(1.5)	7/32	**391.38A-1A-T09A[3]**
75°	15°	TC...09	TC...1.8(1.5)	7/32	**391.38B-1-T09A**
92°	-2°	CP...06	CP...2(1.5)	1/4	**391.38U-1CP06A**
92°	-2°	TP...09	TP...1.8(1.5)	7/32	**391.38U-1TP09A**
92°	-2°	TP...09	TP...1.8(1.5)	7/32	**391.38U-1ATP09A[3]**
92°	-2°	CC...09	CC...3(2.5)	1/4	**391.38A-2-C09A[2]**
92°	-2°	TC...1103	TC...22	1/4	**391.38U-2TC11A**
92°	-2°	TC...1103	TC...22	1/4	**391.38U-2ATC11A[3]**
95°	-5°	CC...09	CC...3(2.5)	3/8	**391.38L-2CC09A**
75°	15°	TC...1103	TC...22	1/4	**391.38K-2TC11A**
92°	-2°	TP...11	TP...22	1/4	**391.38U-2TP11A**
92°	-2°	TP...11	TP...22	1/4	**391.38U-2ATP11A[3]**

1) Inserts are ordered separately.
2) Cartridge 391.38A-2-C09A extends the l_1 dimension by 3 mm (.118 inch)
3) Extended clearance, plus 3 mm (.118 inch) on dia. Recommended for long chipping materials, or when coolant is not possible to use.

Spare parts for insert clamping

Insert size			
iC	*iC*	Screw for insert	Key (Torx Plus)[4]
1/4		5513 020-03	5680 046-03 (7IP)
3/8		5513 020-09	5680 046-02 (15IP)
	7/32	5513 020-05	5680 046-03 (7IP)
	1/4	5513 020-03	5680 046-03 (7IP)

4) Accessories, must be ordered separately.

F59

SANDVIK Coromant

T-Max U fine boring units

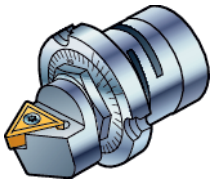

Left hand version shown

Straight mounting
κ_r = 90°
Lead angle 0°

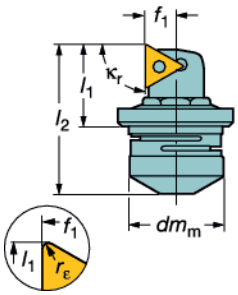

Right hand version shown

Angular mounting
κ_r = 90°
0°

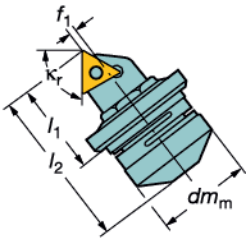

Right hand version shown

	Entering angle κ_r	Lead angle	Insert type[1] ISO	ANSI	*iC*	Ordering code	Dimensions, mm (inch) *dm*m	*l*1[2]	*l*2	*f*1[2]	*D*min[3]	*λ*[4]	Cartridge R	L
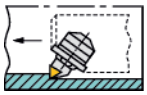						Angular mounting								
	90°	0°	CC..06 02	CC..2 (1.2)	1/4	**R/L148C-31-06 02**	16	14.3	25.15	0.45	25.5	–3°	**R148D-31-06 02**	**L148D-31-06 02**
							(.630)	*(.563)*	*(.990)*	*(.018)*	*(.992)*			
	90°	0°	TC..06 T1	TC..1.2 (1.2)	5/32	**L148C-31-06 T1**	16	14.3	25.0	0.2	24.8	0°	–	**L148D-31-06 T1**
							(.630)	*(.563)*	*(.984)*	*(.008)*	*(.976)*			
	90°	0°	TC..09 02	TC..1.8 (1.5)	7/32	**R/L148C-32-09 02**	20	19.1	33.7	0.9	32.5	0°	**R148D-32-09 02**	**L148D-32-09 02**
							(.787)	*(.752)*	*(1.327)*	*(.035)*	*(1.280)*			
	90°	0°	TC..11 03	TC..22	1/4	**R/L148C-33-11 03**	22	23.0	45.3	1.1	42.0	0°	–	**L148D-33-11 03**
							(.866)	*(.906)*	*(1.783)*	*(.043)*	*(1.654)*			
	90°	0°	TC..16 T3	TC..3 (2.5)	3/8	**R/L148C-34-16 T3**	32	33.3	62.3	1.2	59.4	0°	**R148D-34-16 T3**	**L148D-34-16 T3**
							(1.260)	*(1.311)*	*(2.453)*	*(.047)*	*(2.339)*			
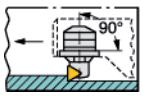						Straight mounting								
	90°	0°	CC..06 03	CC..2 (1.5)	1/4	**R/L148C-11-06 02**	16	13.3	24.1	5.1	27.0	–3°	**R148D-11-06 02**	**L148D-11-06 02**
							(.630)	*(.524)*	*(.949)*	*(.201)*	*(1.063)*			
	90°	0°	TC..09 02	TC..1.8 (1.5)	7/32	**R/L148C-12-09 02**	20	18.3	32.9	6.3	36.5	0°	**R148D-12-09 02**	**L148D-12-09 02**
							(.787)	*(.720)*	*(1.295)*	*(.248)*	*(1.437)*			
	90°	0°	TC..11 03	TC..22	1/4	**R/L148C-13-11 03**	22	22.1	44.3	7.2	48.5	0°	–	**L148D-13-11 03**
							(.866)	*(.870)*	*(1.744)*	*(.283)*	*(1.909)*			
	90°	0°	TC..16 T3	TC..3 (2.5)	3/8	**R/L148C-14-16 T3**	32	32.0	62.7	10.3	68.4	0°	–	–
							(1.260)	*(1.260)*	*(2.469)*	*(.406)*	*(2.693)*			

1) Inserts are ordered separately.
2) To sharp corner (r_ε = 0.0) and screwed in cartridge.
3) Min hole diameter, calculated on largest nose radius available.
4) λ = Angle of inclination

Ordering example: 1 piece L148C-31-06 T1
R = Right hand, L = Left hand

F59 F119 F90

Mounting dimensions for T-Max U fine boring units

R/L 148C

Straight mounting
K_r = 90° (0°)

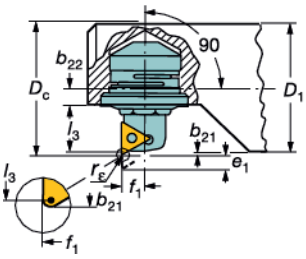

Angular mounting
K_r = 90° (0°)

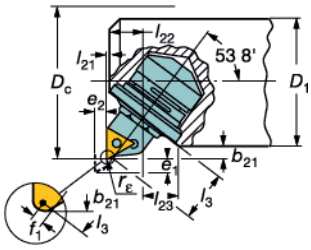

Left hand version shown

Feed direction	iC	Insert radius r_ε	D_1 min	D_c min	b_{21} min	e_1 max	e_2 max	b_{22} min	l_3 min[1]	l_{21}	l_{22}	l_{23}	f_1
			Dimensions, mm (inch)										
Straight mounting		0.2 (.008)		27.9 (1.098)	0.60 (.024)				9.8 (.386)				
K_r = 90°	06 1/4	0.4 (.016)	26.0 (1.024)	27.6 (1.087)	0.55 (.022)	2.5 (.098)	–	3.60 (.142)	9.6 (.378)	–	–	–	5.1 (.201)
Lead angle 0°		0.8 (.031)		27.0 (1.063)	0.50 (.020)				9.1 (.358)				
		0.2 (.008)		37.4 (1.472)	1.45 (.057)				13.95 (.549)				
	09 7/32	0.4 (.016)	34.5 (1.358)	37.1 (1.461)	1.30 (.051)	3.5 (.138)	–	4.55 (.179)	13.6 (.535)	–	–	–	6.3 (.248)
		0.8 (.031)		36.5 (1.437)	1.00 (.039)				12.9 (.508)				
		0.2 (.008)		49.4 (1.945)	1.45 (.057)				16.75 (.659)				
	11 1/4	0.4 (.016)	46.5 (1.831)	49.1 (1.933)	1.30 (.051)	6 (.236)	–	7.75 (.305)	16.4 (.646)	–	–	–	7.2 (.283)
		0.8 (.031)		48.5(1.909)	1.00 (.039)				15.7 (.618)				
		0.4 (.016)		69.6 (2.740)	1.30 (.051)				25.0 (.984)				
	16 3/8	0.8 (.031)	67.0 (2.638)	69.0 (2.717)	1.00 (.039)	10 (.394)	–	9.40 (.370)	24.3 (.957)	–	–	–	10.3 (.406)
		1.2 (.047)		68.4 (2.693)	0.70 (.028)				23.6 (.929)				
Angular mounting		0.2 (.008)		26.2 (1.032)	1.70 (.067)				11.0 (.433)				0.4 (.016)
K_r = 90°	06 1/4	0.4 (.016)	22.0 (.886)	25.9 (1.020)	1.65 (.065)	2 (.079)	1.5 (.059)	–	10.7 (.421)	0.5 (.020)	6.60 (.260)	9.55 (.376)	0.4 (.016)
Lead angle 0°		0.8 (.031)		25.3 (.996)	1.60 (.063)				10.1 (.398)				0.45 (.018)
		0.2 (.008)		25.7 (1.012)	1.50 (.059)				10.9 (.429)				0.4 (.016)
	06 5/32	0.4 (.016)	22.0 (.866)	25.4 (1.000)	1.45 (.057)	2 (.079)	1.5 (.059)	–	10.6 (.417)	0.5 (.020)	6.60 (.260)	9.55 (.376)	0.4 (.016)
		0.8 (.031)		24.8 (.976)	1.40 (.055)				10.0 (.394)				0.45 (.018)
		0.2 (.008)		33.4 (1.314)	2.45 (.096)				14.9 (.587)				0.95 (.037)
	09 7/32	0.4 (.016)	28.5 (1.122)	33.1 (1.303)	2.30 (.091)	2.8 (.110)	2.1 (.083)	–	14.5 (.571)	0.5 (.020)	9.40 (.370)	12.15 (.478)	1.0 (.039)
		0.8 (.031)		32.5 (1.280)	2.00 (.079)				13.7 (.539)				1.1 (.043)
		0.2 (.008)		42.9 (1.689)	2.45 (.096)				17.6 (.693)				1.15 (.045)
	11 1/4	0.4 (.016)	38.0 (1.496)	42.6 (1.677)	2.30 (.091)	4.8 (.189)	3.6 (.142)	–	17.2 (.677)	0.5 (.020)	11.20 (.441)	14.85 (.585)	1.2 (.047)
		0.8 (.031)		42.0 (1.654)	2.00 (.079)				16.4 (.646)				1.3 (.051)
		0.4 (.016)		60.6 (2.386)	2.80 (.110)				26.2 (1.031)				1.3 (.051)
	16 3/8	0.8 (.031)	55.0 (2.165)	60.0 (2.362)	2.50 (.098)	8 (.315)	6.0 (.236)	–	25.4 (1.000)	0.5 (.020)	16.65 (.656)	23.70 (.933)	1.4 (.055)
		1.2 (.047)		59.4 (2.339)	2.20(.087)				24.6 (.969)				1.5 (.059)

[1] On completely screwed in cartridge.

Setting the boring unit R/L148C

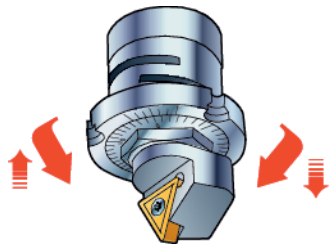

T-Max fine boring units are precision tools for mounting in special tools capable of machining close tolerances.
Features:
– Can be mounted in blind holes
– Adjustment is made from the front
– The units are self-locking, i.e. there is no need for unlocking before, or locking after setting
– CoroTurn® 107 screw clamp design

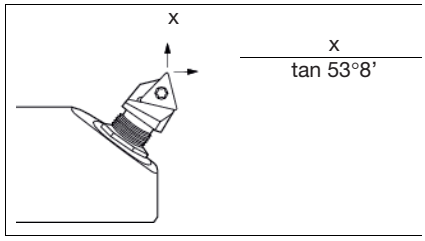

Turning the adjusting nut sets the bore diameter. The nut has a scale where each division is equivalent to .0004 inch change of radial depth of cut.
With the exception of the smallest size, all units have vernier scales on the collar, which facilitates radial adjustments of .00004 inch.

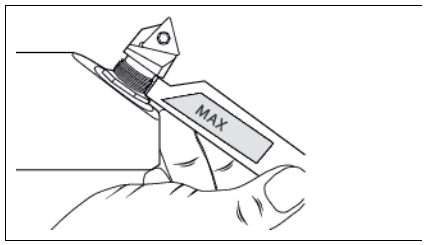

Please note:
– When setting a unit mounted in angular position, the axial position changes equal to radial movement/tan 53° 8'.
When designing special tools, please calculate the nominal diameter to be machined with the unit set to the center of the adjustment range, e_1. This makes it possible to adjust the nominal bore plus and minus.
– Never unscrew the cartridge further than indicated by the tongue of the setting key for the unit concerned.
If the limit is exceeded the unit cannot be repaired.
The dimensions and tolerances in the table below must be adhered to in order for the units to be able to function.

Mounting dimensions for T-Max U fine boring units

Applies to units with 16 mm (.630 inch) cutting edge length, 3/8 *iC*

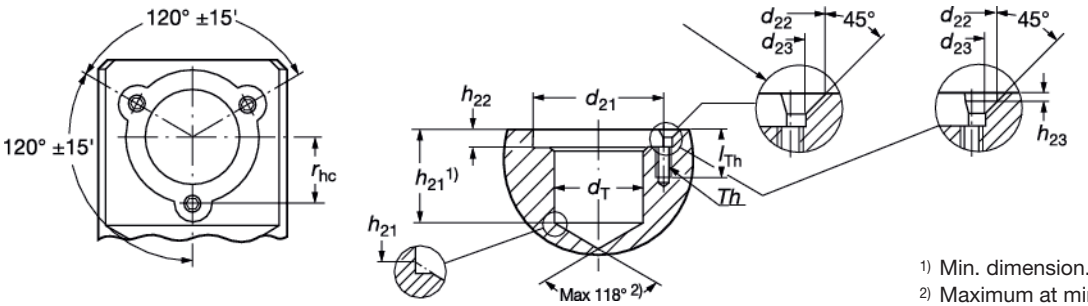

1) Min. dimension. Can be larger if design allows.
2) Maximum at min. dimension.

1) Min. dimension. Can be larger if design allows.
2) Maximum at min. dimension.

		Dimensions, mm (inch)									
	iC	d_T H7	d_{21} 1)	d_{22} 1)	d_{23}	h_{21} 2)	h_{22} 3)	h_{23} 1)	l_{Th}	r_{hc}	T_h
06	5/32	16 (.630)	19 (.748)	4.6 (.181)	3.2 (.126)	11.5 (.453)	2.8 (.110)	1.6 (.063)	9 (.354)	9.65 ±0.02 (.380 ±.0008)	M3
09	7/32	20 (.787)	25 (.984)	4.6 (.181)	3.2 (.126)	15.5 (.610)	4.0 (.157)	1.6 (.063)	9 (.354)	12.50 ±0.05 (.492 ±.002)	M3
11	1/4	22 (.866)	30 (1.181)	6.5 (.256)	4.3 (.169)	24.0 (.945)	5.0 (.197)	1.8 (.071)	13 (.512)	15.40 ±.0.05 (.606 ±.002)	M4
16	3/8	32 (1.260)	46 (1.811)	11.9 (.469)	5.4 (.213)	33.0 (1.299)	6.3 (.248)	–	16 (.630)	23.00 ±0.05 (.906 ±.002)	M5
06	1/4	16 (.630)	19 (.748)	4.6 (.181)	3.2 (.126)	11.5 (.453)	2.8 (.110)	1.6 (.063)	9 (.354)	9.65 ±0.02 (.380 ±.0008)	M3

1) +0.2 (+.004)
-0 (-0)
2) +0.2 (+.008)
-0 (-0)
3) ±0.2 (±.008)

Coromant flexible boring tool

Your concept for boring

Coromant Flexible Boring Tools are built up of building blocks with seat pockets, cartridges, fine boring units and couplings.

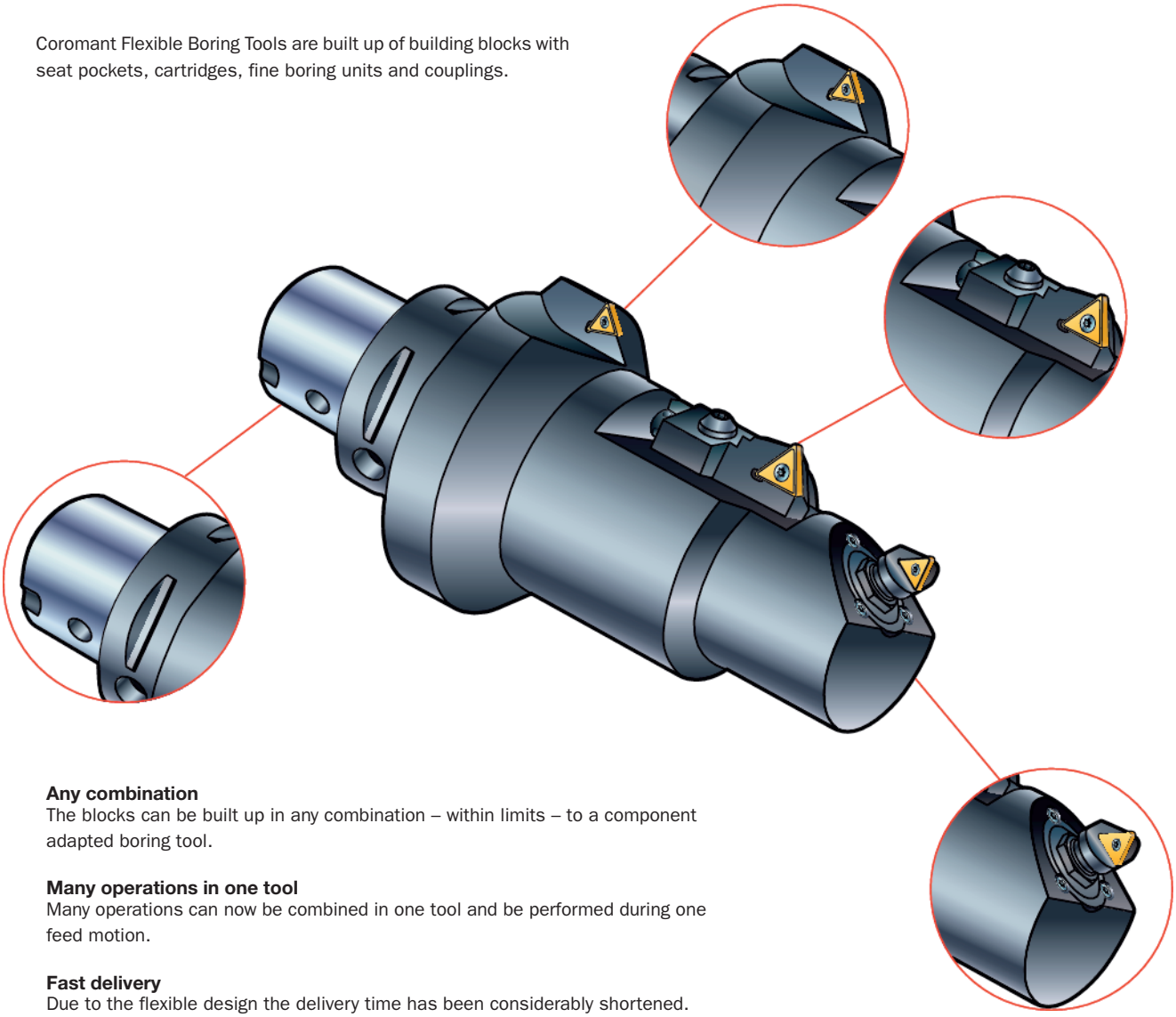

Any combination
The blocks can be built up in any combination – within limits – to a component adapted boring tool.

Many operations in one tool
Many operations can now be combined in one tool and be performed during one feed motion.

Fast delivery
Due to the flexible design the delivery time has been considerably shortened.

Prices close to standard
Due to the block concept the prices are close to standard.

Response within 24 hours
Please contact your local Sandvik Coromant office for more information.

T-MAX P

Rhombic 80°

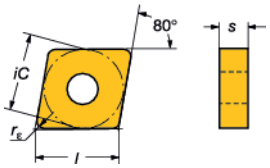

For ISO application areas, see bottom of the table.

		ISO	□	iC	P							M						K					N		S							ANSI
					GC	GC	GC	GC	GC	GC	CT	GC	GC	GC	GC	GC	GC	GC	GC	GC	GC	-	-	-	GC	GC	GC	-	-	GC		
					1515	1525	4205	4215	4225	4235	5015	1115	1125	2015	2025	2035	235	3005	3205	3210	3215	H13A	H13A	1005	1105	1115	1125	H10A	H13A	S05F	
Finishing	CNMG-WF	CNMG 12 04 04-WF	12	1/2	☆	☆		★	☆		☆	☆	☆	★				☆			★											CNMG 431-WF
		CNMG 12 04 08-WF			☆	☆	☆	★	☆		☆	☆	☆	★				☆			★											CNMG 432-WF
		CNMG 12 04 12-WF			☆		☆	★	☆				★								★											CNMG 433-WF
	CNMG-WL	CNMG 12 04 04-WL	12	1/2	☆	☆		★	☆						☆																	CNMG 431-WL
		CNMG 12 04 08-WL			☆	☆		★	☆						☆																	CNMG 432-WL
	CNMG-PF	CNMG 12 04 04-PF	12	1/2	☆	☆		★	☆		☆																					CNMG 431-PF
		CNMG 12 04 08-PF			☆	☆	☆	★	☆		☆																					CNMG 432-PF
		CNMG 12 04 12-PF			☆	☆	☆	★	☆		☆																					CNMG 433-PF
	CNMG-MF	CNMG 12 04 04-MF	12	1/2								☆	☆	★	☆										☆	☆	☆			☆		CNMG 431-MF
		CNMG 12 04 08-MF										☆	☆	★	☆										☆	☆	☆			☆		CNMG 432-MF
		CNMG 12 04 12-MF										☆	☆	★	☆										☆	☆	☆			☆		CNMG 433-MF
	CNMG-KF	CNMG 12 04 04-KF	12	1/2														☆			★											CNMG 431-KF
		CNMG 12 04 08-KF																☆			★											CNMG 432-KF
		CNMG 12 04 12-KF																☆			★											CNMG 433-KF
	CNMG-SF	CNMG120404-SF	12	1/2																					★	☆	☆		☆	☆		CNMG 431-SF
		CNMG120408-SF																							★	☆	☆		☆	☆		CNMG 432-SF
		CNMG120412-SF																							★	☆			☆	☆		CNMG 433-SF
	CNGG-SGF	CNGG120404-SGF	12	1/2								☆	☆												★	☆	☆		☆	☆		CNGG 431-SGF
		CNGG120408-SGF										☆	☆												★	☆	☆		☆	☆		CNGG 432-SGF
		CNGG120412-SGF										☆													★	☆			☆	☆		CNGG 433-SGF
	CNMG-LC	CNMG 12 04 04-LC	12	1/2	☆	☆		★	☆						☆																	CNMG 431-LC
		CNMG 12 04 08-LC			☆	☆		★	☆						☆																	CNMG 432-LC
					P25	P15	P05	P15	P25	P35	P10	M15	M25	M15	M25	M35	M35	K10	K05	K10	K15	K20	N15	S15	S15	S15	S25	S10	S15	S05	

★= First choice

T-MAX P

Rhombic 80°

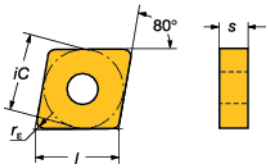

For ISO application areas, see bottom of the table.

		ISO	◻	iC	P							M						K					N	N	S								ANSI
					GC	GC	GC	GC	GC	GC	CT	GC	GC	GC	GC	GC	GC	GC	GC	GC	GC	-	-	-	GC	GC	GC	GC	-	-	GC		
					1515	1525	4205	4215	4225	4235	5015	1115	1125	2015	2025	2035	235	3005	3205	3210	3215	H13A	H13A	1005	1105	1115	1125	H10A	H13A	S05F		
Finishing	CNMG-QF	CNMG 12 04 04-QF	12	1/2				☆	☆		☆																						CNMG 431-QF
		CNMG 12 04 08-QF						☆	☆		☆																						CNMG 432-QF
		CNMG 12 04 12-QF						☆			☆																						CNMG 433-QF
	CNGP	CNGP 12 04 01	12	1/2								☆												☆	★	☆			☆				CNGP 43(0.3)
		CNGP 12 04 02										☆												☆	★	☆							CNGP 430
	CNMG-MF*	CNMG 12 04 04-MF	12	1/2				☆	☆	☆	☆						☆																CNMG 431-MF
		CNMG 12 04 08-MF						☆	☆	☆	☆						☆											☆					CNMG 432-MF
		CNMG 12 04 12-MF						☆	☆	☆							☆											☆					CNMG 433-MF
		CNMG 12 04 16-MF						☆																									CNMG 434-MF
Medium	CNMG-WMX Wiper TECHNOLOGY	CNMG 12 04 08-WMX	12	1/2			☆	★	☆					★					☆	☆	★												CNMG 432-WMX
		CNMG 12 04 12-WMX					☆	★	☆					★					☆	☆	★												CNMG 433-WMX
		CNMG 16 06 08-WMX	16	5/8			☆	★	☆					★					☆	☆	★												CNMG 542-WMX
		CNMG 16 06 12-WMX					☆	★	☆					★					☆	☆	★												CNMG 543-WMX
	CNMG-PM	CNMG 12 04 04-PM	12	1/2				☆	★	☆																							CNMG 431-PM
		CNMG 12 04 08-PM				☆	☆	☆	★	☆																							CNMG 432-PM
		CNMG 12 04 12-PM				☆	☆	☆	★	☆																							CNMG 433-PM
		CNMG 12 04 16-PM					☆	☆	★	☆																							CNMG 434-PM
		CNMG 16 06 08-PM	16	5/8			☆	☆	★	☆																							CNMG 542-PM
		CNMG 16 06 12-PM					☆	☆	★	☆																							CNMG 543-PM
		CNMG 16 06 16-PM					☆	☆	★	☆																							CNMG 544-PM
		CNMG 19 06 08-PM	19	3/4			☆	☆	★	☆																							CNMG 642-PM
		CNMG 19 06 12-PM					☆	☆	★	☆																							CNMG 643-PM
		CNMG 19 06 16-PM					☆	☆	★	☆																							CNMG 644-PM
	CNMG-MM	CNMG 12 04 08-MM	12	1/2								☆	☆	☆	★	☆						☆	☆							☆			CNMG 432-MM
		CNMG 12 04 12-MM										☆	☆	☆	★	☆																	CNMG 433-MM
		CNMG 12 04 16-MM												☆	★	☆																	CNMG 434-MM
		CNMG 16 06 08-MM	16	5/8										☆	★	☆																	CNMG 542-MM
		CNMG 16 06 12-MM												☆	★	☆																	CNMG 543-MM
		CNMG 16 06 16-MM													★	☆																	CNMG 544-MM
		CNMG 19 06 08-MM	19	3/4											★	☆																	CNMG 642-MM
		CNMG 19 06 12-MM												☆	★	☆																	CNMG 643-MM
		CNMG 19 06 16-MM													★	☆																	CNMG 644-MM
	CNMG-KM	CNMG 12 04 08-KM	12	1/2														☆	☆	★	☆												CNMG 432-KM
		CNMG 12 04 12-KM																☆	☆	★	☆												CNMG 433-KM
		CNMG 12 04 16-KM																	☆	★	☆												CNMG 434-KM
		CNMG 16 06 08-KM	16	5/8															☆	★	☆												CNMG 542-KM
		CNMG 16 06 12-KM																	☆	★	☆												CNMG 543-KM
		CNMG 16 06 16-KM																	☆	★	☆												CNMG 544-KM
					P25	P15	P05	P15	P25	P35	P10	M15	M25	M15	M25	M35	M35	K10	K05	K10	K15	K20	N15	S15	S15	S15	S25	S10	S15	S05		

★= First choice

* Dedicated geometry for finishing of gummy materials.

SANDVIK Coromant

T-MAX P

Rhombic 80°

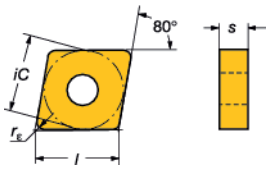

		ISO	⊡	iC	P						M						K					N		S							ANSI
					GC 1515	GC 1525	GC 4205	GC 4215	GC 4225	GC 4235	GC 5015	GC 1115	GC 1125	GC 2015	GC 2025	GC 2035	GC 235	GC 3005	GC 3205	GC 3210	GC 3215	- H13A	- H13A	GC 1005	GC 1105	GC 1115	GC 1125	- H10A	- H13A	GC S05F	
Medium	CNMG-KM	CNMG 12 04 08-KM	12	1/2														☆	☆	★	☆										CNMG 432-KM
		CNMG 12 04 12-KM																☆	☆	★	☆										CNMG 433-KM
		CNMG 12 04 16-KM																	☆	★	☆										CNMG 434-KM
		CNMG 16 06 08-KM	16	5/8															☆	★	☆										CNMG 542-KM
		CNMG 16 06 12-KM																	☆	★	☆										CNMG 543-KM
		CNMG 16 06 16-KM																	☆	★	☆										CNMG 544-KM
		CNMG 19 06 12-KM	19	3/4															☆	★	☆										CNMG 643-KM
		CNMG 19 06 16-KM																	☆	★	☆										CNMG 644-KM
	CNMG-SM	CNMG 12 04 04-SM	12	1/2																					★	☆	☆		☆	☆	CNMG 431-SM
		CNMG 12 04 08-SM																							★	☆	☆		☆	☆	CNMG 432-SM
		CNMG 12 04 12-SM																							★	☆	☆		☆	☆	CNMG 433-SM
	CNMG-SMR	CNMG120408-SMR	12	1/2																					★	☆	☆		☆	☆	CNMG 432-SMR
		CNMG120412-SMR																							★	☆	☆		☆	☆	CNMG 433-SMR
		CNMG120416-SMR																							★	☆	☆		☆	☆	CNMG 434-SMR
	CNMG-QM	CNMG 12 04 04-QM	12	1/2				☆	☆	☆	☆	☆			☆		☆					☆		☆	☆	☆			☆		CNMG 431-QM
		CNMG 12 04 08-QM					☆	☆	☆	☆	☆	☆		☆	☆		☆					☆		☆	☆	☆			☆	☆	CNMG 432-QM
		CNMG 12 04 12-QM					☆	☆	☆	☆		☆		☆	☆		☆					☆		☆	☆	☆			☆	☆	CNMG 433-QM
		CNMG 12 04 16-QM					☆	☆	☆			☆					☆					☆		☆	☆	☆			☆		CNMG 434-QM
		CNMG 16 06 04-QM	16	5/8				☆	☆								☆														CNMG 541-QM
		CNMG 16 06 08-QM					☆	☆	☆	☆							☆					☆							☆		CNMG 542-QM
		CNMG 16 06 12-QM					☆	☆	☆	☆		☆			☆		☆					☆		☆	☆	☆			☆		CNMG 543-QM
		CNMG 16 06 16-QM					☆		☆																						CNMG 544-QM
		CNMG 19 06 04-QM	19	3/4				☆	☆								☆														CNMG 641-QM
		CNMG 19 06 08-QM					☆	☆	☆	☆							☆														CNMG 642-QM
		CNMG 19 06 12-QM					☆	☆	☆	☆		☆			☆		☆					☆		☆	☆	☆			☆		CNMG 643-QM
		CNMG 19 06 16-QM					☆	☆	☆	☆							☆					☆		☆					☆		CNMG 644-QM
	CNMG-SM	CNMG 12 04 04-SM	12	1/2					☆																						CNMG 431-SM
		CNMG 12 04 08-SM						☆	☆	☆																					CNMG 432-SM
		CNMG 12 04 12-SM						☆	☆	☆																					CNMG 433-SM
		CNMG 16 06 12-SM	16	5/8					☆																						CNMG 543-SM
	CNMG-HM	CNMG 16 06 12-HM	16	5/8			☆	☆	★	☆					★																CNMG 543-HM
		CNMG 16 06 16-HM					☆	☆	★	☆					★																CNMG 544-HM
		CNMG 19 06 12-HM	19	3/4			☆	☆	★	☆					★																CNMG 643-HM
		CNMG 19 06 16-HM					☆	☆	★	☆					★																CNMG 644-HM
		CNMG 19 06 24-HM					☆	☆	★	☆					★																CNMG 646-HM
					P25	P15	P05	P15	P25	P35	P10	M15	M25	M15	M25	M35	M35	K10	K05	K10	K15	K20	N15	S15	S15	S15	S25	S10	S15	S05	

★= First choice

* Dedicated geometry for finishing of gummy materials.

T-MAX P

Rhombic 80°

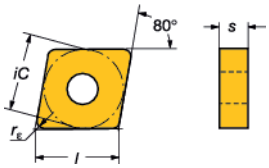

For ISO application areas, see bottom of the table.

		ISO	⊡	iC	P							M						K						N	S								ANSI
					GC	GC	GC	GC	GC	GC	CT	GC	GC	GC	GC	GC	GC	GC	GC	GC	GC	-	-	-	GC	GC	GC	GC	-	-	GC		
					1515	1525	4205	4215	4225	4235	5015	1115	1125	2015	2025	2035	235	3005	3205	3210	3215	H13A	H13A	1005	1105	1115	1125	H10A	H13A	S05F		
Roughing	CNMM-WR	CNMM 12 04 08-WR	12	1/2			☆	★	☆																								CNMM 432-WR
		CNMM 12 04 12-WR					☆	★	☆																								CNMM 433-WR
		CNMM 12 04 16-WR					☆	★	☆																								CNMM 434-WR
		CNMM 16 06 12-WR	16	5/8			☆	★																									CNMM 543-WR
		CNMM 16 06 16-WR					☆		★																								CNMM 544-WR
		CNMM 19 06 16-WR	19	3/4			☆	★	☆																								CNMM 644-WR
	CNMG-PR	CNMG 12 04 08-PR	12	1/2			☆	☆	★	☆				☆	☆																		CNMG 432-PR
		CNMG 12 04 12-PR					☆	☆	★	☆					☆																		CNMG 433-PR
		CNMG 12 04 16-PR					☆	☆	★	☆				☆	☆																		CNMG 434-PR
		CNMG 16 06 08-PR	16	5/8			☆	☆	★	☆																							CNMG 542-PR
		CNMG 16 06 12-PR					☆	☆	★	☆					☆																		CNMG 543-PR
		CNMG 16 06 16-PR					☆	☆	★	☆					☆																		CNMG 544-PR
		CNMG 16 06 24-PR					☆	☆	★	☆																							CNMG 546-PR
		CNMG 19 06 08-PR	19	3/4			☆	☆	★	☆																							CNMG 642-PR
		CNMG 19 06 12-PR					☆	☆	★	☆					☆																		CNMG 643-PR
		CNMG 19 06 16-PR					☆	☆	★	☆					☆																		CNMG 644-PR
		CNMG 19 06 24-PR					☆	☆	★	☆																							CNMG 646-PR
	CNMM-PR	CNMM 12 04 08-PR	12	1/2			☆	☆	★	☆																							CNMM 432-PR
		CNMM 12 04 12-PR					☆	☆	★	☆																							CNMM 433-PR
		CNMM 12 04 16-PR					☆	☆	★																								CNMM 434-PR
		CNMM 16 06 08-PR	16	5/8			☆	☆	★	☆																							CNMM 542-PR
		CNMM 16 06 12-PR					☆	☆	★	☆																							CNMM 543-PR
		CNMM 16 06 16-PR					☆	☆	★	☆																							CNMM 544-PR
		CNMM 19 06 12-PR	19	3/4			☆	☆	★	☆																							CNMM 643-PR
		CNMM 19 06 16-PR					☆	☆	★	☆																							CNMM 644-PR
		CNMM 19 06 24-PR					☆	☆	★	☆																							CNMM 646-PR
	CNMG-MR	CNMG 12 04 08-MR	12	1/2										☆	★	☆																	CNMG 432-MR
		CNMG 12 04 12-MR												☆	★	☆																	CNMG 433-MR
		CNMG 12 04 16-MR												☆	★	☆																	CNMG 434-MR
		CNMG 16 06 12-MR	16	5/8										☆	★	☆																	CNMG 543-MR
		CNMG 16 06 16-MR												☆	★	☆																	CNMG 544-MR
		CNMG 19 06 12-MR	19	3/4										☆	★	☆																	CNMG 643-MR
		CNMG 19 06 16-MR												☆	★	☆																	CNMG 644-MR
		CNMG 19 06 24-MR														★																	CNMG 646-MR
	CNMM-MR	CNMM 12 04 08-MR	12	1/2			☆		☆	☆					★	☆																	CNMM 432-MR
		CNMM 12 04 12-MR					☆	☆	☆						★																		CNMM 433-MR
		CNMM 12 04 16-MR					☆			☆					★																		CNMM 434-MR
		CNMM 16 06 12-MR	16	5/8			☆	☆	☆						★																		CNMM 543-MR
		CNMM 16 06 16-MR					☆	☆	☆	☆					★																		CNMM 544-MR
		CNMM 16 06 24-MR							☆	☆																							CNMM 546-MR
		CNMM 19 06 12-MR	19	3/4			☆		☆						★																		CNMM 643-MR
		CNMM 19 06 16-MR					☆	☆	☆	☆					★	☆																	CNMM 644-MR
		CNMM 19 06 24-MR					☆	☆	☆						★																		CNMM 646-MR
					P25	P15	P05	P15	P25	P35	P10	M15	M25	M15	M25	M35	M35	K10	K05	K10	K15	K20	N15	S15	S15	S15	S25	S10	S15	S05		

★= First choice

SANDVIK Coromant

T-MAX P

Rhombic 80°

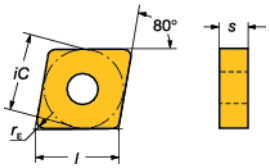

For ISO application areas, see bottom of the table.

		ISO	⊡	iC	P							M						K					N		S							ANSI
					GC	GC	GC	GC	GC	GC	CT	GC	GC	GC	GC	GC	GC	GC	GC	GC	GC	-	-	-	GC	GC	GC	GC	-	-	GC	
					1515	1525	4205	4215	4225	4235	5015	1115	1125	2015	2025	2035	235	3005	3205	3210	3215	H13A	H13A	1005	1105	1115	1125	H10A	H13A	S05F	
Roughing	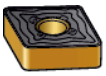 CNMG-KR	CNMG 12 04 08-KR	12	1/2															☆	★	☆											CNMG 432-KR
		CNMG 12 04 12-KR																	☆	★	☆											CNMG 433-KR
		CNMG 12 04 16-KR																	☆	★	☆											CNMG 434-KR
		CNMG 16 06 12-KR	16	5/8															☆	★	☆											CNMG 543-KR
		CNMG 16 06 16-KR																	☆	★	☆											CNMG 544-KR
		CNMG 19 06 12-KR	19	3/4															☆	★	☆											CNMG 643-KR
		CNMG 19 06 16-KR																	☆	★	☆											CNMG 644-KR
	CNMA-KR	CNMA 12 04 04-KR	12	1/2															★	☆	☆											CNMA 431-KR
		CNMA 12 04 08-KR																	★	☆	☆											CNMA 432-KR
		CNMA 12 04 12-KR																	★	☆	☆											CNMA 433-KR
		CNMA 12 04 16-KR																	★	☆	☆											CNMA 434-KR
		CNMA 16 06 12-KR	16	5/8															★	☆	☆											CNMA 543-KR
		CNMA 16 06 16-KR																	★	☆	☆											CNMA 544-KR
		CNMA 19 06 08-KR	19	3/4															★	☆	☆											CNMA 642-KR
		CNMA 19 06 12-KR																	★	☆	☆											CNMA 643-KR
		CNMA 19 06 16-KR																	★	☆	☆											CNMA 644-KR
		CNMA 19 06 24-KR																			★											CNMA 646-KR
	CNMG-SM	CNMG 16 06 12-SM	16	5/8																					★	☆	☆		☆	☆		CNMG 543-SM
		CNMG 16 06 16-SM																							★	☆	☆		☆	☆		CNMG 544-SM
		CNMG 19 06 16-SM	19	3/4																					★	☆	☆		☆	☆		CNMG 644-SM
	CNMG-SMR	CNMG160616-SMR	16	5/8																					★	☆	☆		☆			CNMG 544-SMR
		CNMG190616-SMR	19	3/4																					★	☆	☆		☆			CNMG 644-SMR
	CNMM-QR	CNMM 12 04 08-QR	12	1/2				☆	☆	☆							☆															CNMM 432-QR
		CNMM 12 04 12-QR					☆	☆	☆	☆					☆		☆															CNMM 433-QR
		CNMM 12 04 16-QR						☆	☆								☆															CNMM 434-QR
		CNMM 16 06 08-QR	16	5/8					☆																							CNMM 542-QR
		CNMM 16 06 12-QR					☆	☆	☆	☆							☆															CNMM 543-QR
		CNMM 16 06 16-QR					☆	☆	☆	☆							☆															CNMM 544-QR
		CNMM 16 06 24-QR						☆	☆																							CNMM 546-QR
		CNMM 19 06 08-QR	19	3/4					☆								☆															CNMM 642-QR
		CNMM 19 06 12-QR						☆	☆	☆							☆															CNMM 643-QR
		CNMM 19 06 16-QR						☆	☆	☆							☆															CNMM 644-QR
		CNMM 19 06 24-QR						☆	☆	☆							☆															CNMM 646-QR
	CNMM-HR	CNMM 19 06 16-HR	19	3/4				☆	☆	☆							☆															CNMM 644-HR
		CNMM 19 06 24-HR						☆	☆	☆																						CNMM 646-HR
	CNMG-MR*	CNMG 12 04 08-MR	12	1/2			☆	☆	☆	☆							☆															CNMG 432-MR
		CNMG 12 04 12-MR					☆	☆	☆	☆							☆															CNMG 433-MR
		CNMG 12 04 16-MR					☆	☆	☆	☆																						CNMG 434-MR
		CNMG 16 06 08-MR	16	5/8			☆	☆	☆								☆															CNMG 542-MR
		CNMG 16 06 12-MR					☆	☆	☆	☆							☆															CNMG 543-MR
		CNMG 16 06 16-MR					☆	☆	☆	☆																						CNMG 544-MR
		CNMG 19 06 08-MR	19	3/4			☆	☆	☆								☆															CNMG 642-MR
		CNMG 19 06 12-MR					☆	☆	☆	☆							☆															CNMG 643-MR
		CNMG 19 06 16-MR					☆	☆	☆	☆							☆															CNMG 644-MR
	CNMG-SR	CNMG 19 06 16-SR	19	3/4																				☆	★	☆			☆			CNMG 644-SR
					P25	P15	P05	P15	P25	P35	P10	M15	M25	M15	M25	M35	M35	K10	K05	K10	K15	K20	N15	S15	S15	S15	S25	S10	S15	S05		

★= First choice

* Dedicated geometry for steel and stainless steel roughing.

T-MAX P

Square

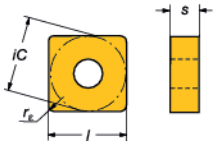

For ISO application areas, see bottom of the table.

		ISO	□	iC	P							M						K					S						ANSI
					GC	GC	GC	GC	GC	GC	CT	GC	GC	GC	GC	GC	GC	GC	GC	GC	GC	-	GC	GC	GC	GC	-	GC	
					1515	1525	4205	4215	4225	4235	5015	1115	1125	2015	2025	2035	235	3005	3205	3210	3215	H13A	1005	1105	1115	1125	H13A	S05F	
Finishing	SNMG-PF	SNMG 12 04 08-PF	12	1/2	☆	☆	☆	★	☆		☆																		SNMG 432-PF
		SNMG 12 04 12-PF			☆	☆	☆	★	☆		☆																		SNMG 433-PF
	SNMG-MF	SNMG 12 04 04-MF	12	1/2								☆	☆	★	☆										☆	☆			SNMG 431-MF
		SNMG 12 04 08-MF										☆	☆	★	☆										☆	☆			SNMG 432-MF
	SNMG-QF	SNMG 12 04 04-QF	12	1/2					☆		☆																		SNMG 431-QF
		SNMG 12 04 08-QF							☆		☆																		SNMG 432-QF
	SNMG-MF*	SNMG 12 04 04-MF	12	1/2							☆																		SNMG 431-MF
		SNMG 12 04 08-MF						☆	☆	☆	☆						☆												SNMG 432-MF
		SNMG 12 04 12-MF						☆	☆	☆							☆												SNMG 433-MF
		SNMG 12 04 16-MF									☆																		SNMG 434-MF
Medium	SNMG-PM	SNMG 12 04 04-PM	12	1/2				☆	★	☆																			SNMG 431-PM
		SNMG 12 04 08-PM					☆	☆	★	☆																			SNMG 432-PM
		SNMG 12 04 12-PM					☆	☆	★	☆																			SNMG 433-PM
		SNMG 12 04 16-PM					☆	☆	★	☆																			SNMG 434-PM
		SNMG 15 06 12-PM	15	5/8			☆	☆	★	☆																			SNMG 543-PM
		SNMG 15 06 16-PM					☆	☆	★																				SNMG 544-PM
	SNMG-MM	SNMG 12 04 08-MM	12	1/2								☆	☆	☆	★	☆													SNMG 432-MM
		SNMG 12 04 12-MM												☆	★	☆													SNMG 433-MM
		SNMG 12 04 16-MM												☆	★	☆													SNMG 434-MM
		SNMG 15 06 12-MM	15	5/8											★	☆													SNMG 543-MM
		SNMG 15 06 16-MM													★														SNMG 544-MM
	SNMG-KM	SNMG 12 04 08-KM	12	1/2															☆	★	☆								SNMG 432-KM
		SNMG 12 04 12-KM																☆	☆	★	☆								SNMG 433-KM
		SNMG 12 04 16-KM																	☆	★	☆								SNMG 434-KM
		SNMG 15 06 12-KM	15	5/8															☆	★	☆								SNMG 543-KM
		SNMG 15 06 16-KM																	★		☆								SNMG 544-KM
	SNMG-SM	SNMG 12 04 08-SM	12	1/2																				★	☆	☆	☆	☆	SNMG 432-SM
		SNMG 12 04 12-SM																						★	☆	☆	☆	☆	SNMG 433-SM
		SNMG 12 04 16-SM																						★	☆	☆	☆	☆	SNMG 434-SM
					P25	P15	P05	P15	P25	P35	P10	M15	M25	M15	M25	M35	M35	K10	K05	K10	K15	K20	S15	S15	S15	S25	S15	S05	

★= First choice

* Dedicated geometry for finishing of gummy materials.

SANDVIK Coromant

T-MAX P

Square

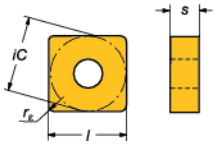

For ISO application areas, see bottom of the table.

		ISO	◻	iC	P							M						K					S						ANSI
					GC	GC	GC	GC	GC	GC	CT	GC	GC	GC	GC	GC	GC	GC	GC	GC	GC	-	GC	GC	GC	GC	-	GC	
					1515	1525	4205	4215	4225	4235	5015	1115	1125	2015	2025	2035	235	3005	3205	3210	3215	H13A	1005	1105	1115	1125	H13A	S05F	
Medium	SNMG-SMR	SNMG120408-SMR	12	1/2																				★	☆	☆	☆	☆	SNMG 432-SMR
		SNMG120412-SMR																						★	☆	☆	☆	☆	SNMG 433-SMR
		SNMG120416-SMR																						★	☆	☆	☆	☆	SNMG 434-SMR
	SNMG-QM	SNMG 12 04 04-QM	12	1/2					☆	☆							☆												SNMG 431-QM
		SNMG 12 04 08-QM					☆	☆	☆	☆	☆	☆			☆		☆					☆	☆	☆	☆		☆	☆	SNMG 432-QM
		SNMG 12 04 12-QM					☆	☆	☆	☆	☆	☆			☆		☆					☆	☆	☆	☆		☆		SNMG 433-QM
		SNMG 12 04 16-QM							☆			☆					☆					☆	☆	☆	☆		☆		SNMG 434-QM
		SNMG 15 06 08-QM	15	5/8					☆																				SNMG 542-QM
		SNMG 15 06 12-QM							☆			☆					☆					☆	☆	☆	☆		☆		SNMG 543-QM
		SNMG 15 06 16-QM							☆			☆											☆	☆	☆				SNMG 544-QM
	SNMG-SM	SNMG 12 04 08-SM	12	1/2					☆																				SNMG 432-SM
		SNMG 12 04 12-SM							☆																				SNMG 433-SM
	SNMG-HM	SNMG 15 06 12-HM	15	5/8			☆	☆	★	☆					★														SNMG 543-HM
		SNMG 15 06 16-HM					☆	☆	★	☆					★														SNMG 544-HM
Roughing	SNMG-PR	SNMG 12 04 08-PR	12	1/2			☆	☆	★	☆																			SNMG 432-PR
		SNMG 12 04 12-PR					☆	☆	★	☆																			SNMG 433-PR
		SNMG 12 04 16-PR					☆	☆	★	☆																			SNMG 434-PR
		SNMG 15 06 08-PR	15	5/8			☆	☆	★	☆																			SNMG 542-PR
		SNMG 15 06 12-PR					☆	☆	★	☆																			SNMG 543-PR
		SNMG 15 06 16-PR					☆	☆	★	☆																			SNMG 544-PR
		SNMG 15 06 24-PR					☆	☆	★	☆																			SNMG 546-PR
	SNMM-PR	SNMM 12 04 08-PR	12	1/2				☆	★	☆																			SNMM 432-PR
		SNMM 12 04 12-PR					☆	☆	★	☆																			SNMM 433-PR
		SNMM 15 06 12-PR	15	5/8			☆	☆	★	☆																			SNMM 543-PR
		SNMM 15 06 16-PR					☆	☆	★	☆																			SNMM 544-PR
	SNMG-MR	SNMG 12 04 08-MR	12	1/2										☆	★	☆													SNMG 432-MR
		SNMG 12 04 12-MR												☆	★	☆													SNMG 433-MR
		SNMG 15 06 12-MR	15	5/8											★	☆													SNMG 543-MR
		SNMG 15 06 16-MR													★	☆													SNMG 544-MR
	SNMM-MR	SNMM 12 04 08-MR	12	1/2											★	☆													SNMM 432-MR
		SNMM 12 04 12-MR						☆		☆					★	☆													SNMM 433-MR
		SNMM 12 04 16-MR													★														SNMM 434-MR
		SNMM 15 06 12-MR	15	5/8			☆								★														SNMM 543-MR
		SNMM 15 06 16-MR					☆	☆							★														SNMM 544-MR
		SNMM 15 06 24-MR					☆	☆	☆																				SNMM 546-MR
					P25	P15	P05	P15	P25	P35	P10	M15	M25	M15	M25	M35	M35	K10	K05	K10	K15	K20	S15	S15	S15	S25	S15	S05	

★= First choice

T-MAX P

Square

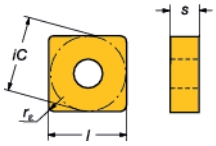

For ISO application areas, see bottom of the table.

		ISO	l □	iC	P							M						K					S						ANSI
					GC	GC	GC	GC	GC	GC	CT	GC	GC	GC	GC	GC	GC	GC	GC	GC	GC	-	GC	GC	GC	GC	-	GC	
					1515	1525	4205	4215	4225	4235	5015	1115	1125	2015	2025	2035	235	3005	3205	3210	3215	H13A	1005	1105	1115	1125	H13A	S05F	
Roughing	SNMG-KR	SNMG 12 04 08-KR	12	1/2															☆	★	☆								SNMG 432-KR
		SNMG 12 04 12-KR																	☆	★	☆								SNMG 433-KR
		SNMG 12 04 16-KR																		★	☆								SNMG 434-KR
		SNMG 15 06 12-KR	15	5/8															☆	★	☆								SNMG 543-KR
		SNMG 15 06 16-KR																		★	☆								SNMG 544-KR
	SNMA-KR	SNMA 12 04 08-KR	12	1/2															★	☆	☆								SNMA 432-KR
		SNMA 12 04 12-KR																	★	☆	☆								SNMA 433-KR
		SNMA 12 04 16-KR																	★	☆	☆								SNMA 434-KR
		SNMA 15 06 12-KR	15	5/8															★	☆	☆								SNMA 543-KR
		SNMA 15 06 16-KR																	★		☆								SNMA 544-KR
	SNMG-SM	SNMG 15 06 12-SM	15	5/8																				★	☆		☆	☆	SNMG 543-SM
		SNMG 15 06 16-SM																						★	☆		☆	☆	SNMG 544-SM
	SNMG-SMR	SNMG150616-SMR	15	5/8																				★	☆		☆	☆	SNMG 544-SMR
	SNMM-QR	SNMM 12 04 08-QR	12	1/2					☆	☆							☆												SNMM 432-QR
		SNMM 12 04 12-QR							☆	☆							☆												SNMM 433-QR
		SNMM 12 04 16-QR							☆	☆																			SNMM 434-QR
		SNMM 15 06 08-QR	15	5/8						☆																			SNMM 542-QR
		SNMM 15 06 12-QR							☆	☆																			SNMM 543-QR
		SNMM 15 06 16-QR							☆																				SNMM 544-QR
		SNMM 15 06 24-QR							☆																				SNMM 546-QR
	SNMG-MR*	SNMG 12 04 08-MR	12	1/2			☆	☆	☆	☆							☆												SNMG 432-MR
		SNMG 12 04 12-MR					☆	☆	☆	☆							☆												SNMG 433-MR
		SNMG 12 04 16-MR					☆	☆	☆								☆												SNMG 434-MR
		SNMG 15 06 12-MR	15	5/8			☆	☆	☆	☆							☆												SNMG 543-MR
		SNMG 15 06 16-MR					☆	☆	☆	☆							☆												SNMG 544-MR
					P25	P15	P05	P15	P25	P35	P10	M15	M25	M15	M25	M35	M35	K10	K05	K10	K15	K20	S15	S15	S15	S25	S15	S05	

★= First choice

* Dedicated geometry for steel and stainless steel roughing.

SANDVIK Coromant

T-MAX P

Triangular

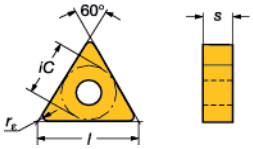

For ISO application areas, see bottom of the table.

		ISO		iC	P						M						K					S						ANSI
					GC	GC	GC	GC	GC	GC	GC	GC	GC	GC	GC	GC	GC	GC	GC	GC	-	GC	GC	GC	GC	-	GC	
					1515	1525	4205	4215	4225	4235	5015	1115	1125	2015	2025	2035	235	3005	3205	3210	3215	H13A	1005	1105	1115	1125	H13A	S05F	
Finishing	TNMG-PF	TNMG 22 04 08-PF	22	1/2	☆	☆		★	☆		☆																		TNMG 432-PF
		TNMG 22 04 12-PF			☆			★	☆																				TNMG 433-PF
	TNMG-QF	TNMG 22 04 04-QF	22	1/2							☆																		TNMG 431-QF
	TNMG-MF*	TNMG 22 04 04-MF	22	1/2					☆		☆						☆												TNMG 431-MF
		TNMG 22 04 08-MF						☆	☆		☆																		TNMG 432-MF
		TNMG 22 04 12-MF						☆	☆																				TNMG 433-MF
Medium	TNMG-PM	TNMG 22 04 04-PM	22	1/2				☆	★	☆																			TNMG 431-PM
		TNMG 22 04 08-PM					☆	☆	★	☆																			TNMG 432-PM
		TNMG 22 04 12-PM					☆	☆	★	☆																			TNMG 433-PM
		TNMG 22 04 16-PM					☆	☆	★	☆																			TNMG 434-PM
	TNMG-MM	TNMG 22 04 08-MM	22	1/2								☆	☆	☆	★	☆													TNMG 432-MM
		TNMG 22 04 12-MM												☆	★	☆													TNMG 433-MM
		TNMG 22 04 16-MM													★														TNMG 434-MM
	TNMG-KM	TNMG 22 04 08-KM	22	1/2															☆	★	☆								TNMG 432-KM
		TNMG 22 04 12-KM																	☆	★	☆								TNMG 433-KM
		TNMG 22 04 16-KM																	☆	★	☆								TNMG 434-KM
	TNMG-SM	TNMG 22 04 08-SM	22	1/2																				★	☆	☆	☆	☆	TNMG 432-SM
		TNMG 22 04 12-SM																						★	☆	☆	☆	☆	TNMG 433-SM
	TNMG-QM	TNMG 22 04 04-QM	22	1/2					☆	☆							☆				☆						☆		TNMG 431-QM
		TNMG 22 04 08-QM					☆	☆	☆	☆							☆				☆						☆		TNMG 432-QM
		TNMG 22 04 12-QM					☆	☆	☆	☆							☆				☆						☆		TNMG 433-QM
		TNMG 22 04 16-QM					☆	☆	☆	☆		☆									☆	☆	☆	☆			☆		TNMG 434-QM
	TNMG-SM	TNMG 22 04 08-SM	22	1/2					☆																				TNMG 432-SM
		TNMG 22 04 12-SM							☆																				TNMG 433-SM
					P25	P15	P05	P15	P25	P35	P10	M15	M25	M15	M25	M35	M35	K10	K05	K10	K15	K20	S15	S15	S15	S25	S15	S05	

R = Right hand, L = Left hand ★= First choice

* Dedicated geometry for finishing of gummy materials.

T-MAX P

Triangular

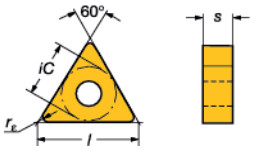

For ISO application areas, see bottom of the table.

		ISO	l	iC	P							M						K					S							ANSI
					GC 1515	GC 1525	GC 4205	GC 4215	GC 4225	GC 4235	CT 5015	GC 1115	GC 1125	GC 2015	GC 2025	GC 2035	GC 235	GC 3005	GC 3205	GC 3210	GC 3215	- H13A	GC 1005	GC 1105	GC 1115	GC 1125	- H13A	GC S05F	
Roughing	TNMX-WR	TNMX 22 04 12-WR	22	1/2				★																						TNMX 433-WR
		TNMX 22 04 16-WR						★																						TNMX 434-WR
		TNMG 22 04 08-PR	22	1/2			☆	☆	★	☆																				TNMG 432-PR
	TNMG-PR	TNMG 22 04 12-PR					☆	☆	★	☆					☆															TNMG 433-PR
		TNMG 22 04 16-PR					☆	☆	★	☆																				TNMG 434-PR
	TNMM-PR	TNMM 22 04 08-PR	22	1/2				☆	★	☆																				TNMM 432-PR
		TNMM 22 04 12-PR						☆	★	☆																				TNMM 433-PR
		TNMM 22 04 16-PR						☆	★	☆																				TNMM 434-PR
	TNMG-MR	TNMG 22 04 08-MR	22	1/2										☆	★	☆														TNMG 432-MR
		TNMG 22 04 12-MR												☆	★	☆														TNMG 433-MR
		TNMG 22 04 16-MR												☆	★	☆														TNMG 434-MR
	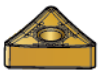 TNMM-MR	TNMM 22 04 08-MR	22	1/2						☆					★															TNMM 432-MR
		TNMM 22 04 12-MR								☆					★															TNMM 433-MR
		TNMM 22 04 16-MR													★															TNMM 434-MR
	TNMG-KR	TNMG 22 04 08-KR	22	1/2															☆	★	☆									TNMG 432-KR
		TNMG 22 04 12-KR																	☆	★	☆									TNMG 433-KR
	TNMA-KR	TNMA 22 04 04-KR	22	1/2																	☆									TNMA 431-KR
		TNMA 22 04 08-KR																	★	☆	☆									TNMA 432-KR
		TNMA 22 04 12-KR																	★	☆	☆									TNMA 433-KR
		TNMA 22 04 16-KR																	★		☆									TNMA 434-KR
		TNMA 22 04 32-KR																			★									TNMA 438-KR
	TNMM-QR	TNMM 22 04 08-QR	22	1/2				☆	☆								☆													TNMM 432-QR
		TNMM 22 04 12-QR						☆	☆	☆							☆													TNMM 433-QR
		TNMM 22 04 16-QR						☆	☆	☆							☆													TNMM 434-QR
	TNMG-MR*	TNMG 22 04 08-MR	22	1/2			☆	☆	☆	☆							☆													TNMG 432-MR
		TNMG 22 04 12-MR					☆	☆	☆	☆							☆													TNMG 433-MR
		TNMG 22 04 16-MR					☆	☆	☆	☆							☆													TNMG 434-MR
		TNMG 22 04 24-MR						☆																						TNMG 436-MR
					P25	P15	P05	P15	P25	P35	P10	M15	M25	M15	M25	M35	M35	K10	K05	K10	K15	K20	S15	S15	S15	S25	S15	S05		

★= First choice

* Dedicated geometry for finishing of gummy materials.

SANDVIK Coromant

CoroTurn® 107

Rhombic 80°

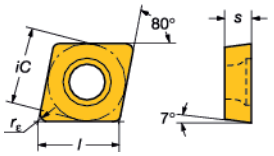

For ISO application areas, see bottom of the table.

		ISO	□	iC	P								M							K					N		S							ANSI
					GC	GC	GC	GC	GC	GC	GC	CT	GC	GC	GC	GC	GC	GC	GC	GC	GC	GC	GC	-	GC	-	GC	GC	GC	GC	-	-		
					1125	1515	1525	4205	4215	4225	4235	5015	1105	1115	1125	2015	2025	2035	235	3005	3205	3210	3215	H13A	1125	H10	1005	1105	1115	1125	H10A	H13A		
Finishing	CCMT-WF	CCMT 06 02 02-WF	06	1/4	★							☆			★																			CCMT 2(1.5)0-WF
		CCMT 06 02 04-WF				☆	☆		★			☆		☆	☆	★				☆			★						★	☆				CCMT 2(1.5)1-WF
		CCMT 06 02 08-WF				☆	☆		★			☆		☆	☆	★				☆			★						★	☆				CCMT 2(1.5)2-WF
		CCMT 09 T3 02-WF	09	3/8	★							☆			★																			CCMT 3(2.5)0-WF
		CCMT 09 T3 04-WF				☆	☆		★			☆		☆	☆	★				☆			★						★	☆				CCMT 3(2.5)1-WF
		CCMT 09 T3 08-WF				☆	☆		★			☆		☆	☆	★				☆			★						★	☆				CCMT 3(2.5)2-WF
	CCMT-PF	CCMT 06 02 02-PF	06	1/4		☆				★		☆																						CCMT 2(1.5)0-PF
		CCMT 06 02 04-PF				☆			★	☆		☆																						CCMT 2(1.5)1-PF
		CCMT 09 T3 02-PF	09	3/8		☆				★		☆																						CCMT 3(2.5)0-PF
		CCMT 09 T3 04-PF				☆			★	☆		☆																						CCMT 3(2.5)1-PF
		CCMT 09 T3 08-PF				☆			★	☆		☆																						CCMT 3(2.5)2-PF
		CCMT 12 04 04-PF	12	1/2		☆			★	☆		☆																						CCMT 431-PF
	CCMT-MF	CCMT 06 02 02-MF	06	1/4										☆	★													★	☆	☆				CCMT 2(1.5)0-MF
		CCMT 06 02 04-MF												☆	☆	★												★	☆	☆				CCMT 2(1.5)1-MF
		CCMT 09 T3 02-MF	09	3/8										☆	★													★	☆	☆				CCMT 3(2.5)0-MF
		CCMT 09 T3 04-MF												☆	☆	★	☆										☆	★	☆	☆				CCMT 3(2.5)1-MF
		CCMT 09 T3 08-MF												☆	☆	★	☆											★	☆	☆				CCMT 3(2.5)2-MF
		CCMT 12 04 04-MF	12	1/2										☆	☆	★	☆												★	☆				CCMT 431-MF
	CCMT-KF	CCMT 06 02 02-KF	06	1/4																				★										CCMT 2(1.5)0-KF
		CCMT 06 02 04-KF																		☆				★										CCMT 2(1.5)1-KF
		CCMT 09 T3 02-KF	09	3/8																				★										CCMT 3(2.5)0-KF
		CCMT 09 T3 04-KF																		☆				★										CCMT 3(2.5)1-KF
		CCMT 12 04 04-KF	12	1/2																				★										CCMT 431-KF
	CCMT-UF	CCMT 06 02 02-UF	06	1/4		☆						☆			☆																			CCMT 2(1.5)0-UF
		CCMT 06 02 04-UF				☆				☆	☆	☆			☆				☆															CCMT 2(1.5)1-UF
		CCMT 06 02 08-UF										☆																						CCMT 2(1.5)2-UF
		CCMT 09 T3 02-UF	09	3/8		☆									☆																			CCMT 3(2.5)0-UF
		CCMT 09 T3 04-UF				☆			☆			☆			☆																			CCMT 3(2.5)1-UF
Medium	CCMT-WM	CCMT 06 02 08-WM	06	1/4		☆			★	☆				★															★					CCMT 2(1.5)2-WM
		CCMT 09 T3 04-WM	09	3/8		☆	☆	☆	★	☆				☆		★													★					CCMT 3(2.5)1-WM
		CCMT 09 T3 08-WM				☆	☆	☆	★	☆				☆		★				☆			★						★					CCMT 3(2.5)2-WM
		CCMT 12 04 04-WM	12	1/2		☆			★	☆				☆		★				☆			★						★					CCMT 431-WM
		CCMT 12 04 08-WM				☆		☆	★	☆				☆		★				☆			★						★					CCMT 432-WM
	CCMT-PM	CCMT 06 02 04-PM	06	1/4		☆	☆		★	☆	☆	☆																						CCMT 2(1.5)1-PM
		CCMT 06 02 08-PM				☆	☆		★	☆	☆	☆																						CCMT 2(1.5)2-PM
		CCMT 09 T3 04-PM	09	3/8		☆	☆	☆	☆	★	☆	☆																						CCMT 3(2.5)1-PM
		CCMT 09 T3 08-PM				☆	☆	☆	☆	★	☆	☆																						CCMT 3(2.5)2-PM
		CCMT 12 04 04-PM	12	1/2		☆			☆	★	☆	☆																						CCMT 431-PM
		CCMT 12 04 08-PM				☆	☆		☆	★	☆	☆																						CCMT 432-PM
		CCMT 12 04 12-PM				☆			☆	★		☆																						CCMT 433-PM
					P25	P25	P15	P05	P15	P25	P35	P10	M15	M15	M25	M15	M25	M35	M35	K10	K05	K10	K15	K20	N25	N15	S15	S15	S15	S25	S10	S15		

★= First choice

CoroTurn® 107

Rhombic 80°

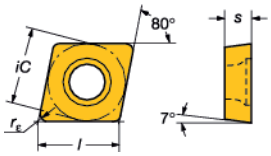

For ISO application areas, see bottom of the table.

		ISO	☐	iC	P								M							K					N		S						ANSI
					GC	GC	GC	GC	GC	GC	GC	CT	GC	GC	GC	GC	GC	GC	GC	GC	GC	GC	GC	-	GC	-	GC	GC	GC	GC	-	-	
					1125	1515	1525	4205	4215	4225	4235	5015	1105	1115	1125	2015	2025	2035	235	3005	3205	3210	3215	H13A	1125	H10	1005	1105	1115	1125	H10A	H13A	
Medium	CCMT-MM	CCMT 06 02 04-MM	06	1/4										☆	☆	★											☆	★	☆	☆			CCMT 2(1.5)1-MM
		CCMT 06 02 08-MM												☆	☆	★											☆	★	☆	☆			CCMT 2(1.5)2-MM
		CCMT 09 T3 04-MM	09	3/8										☆	☆	☆	★	☆									☆	★	☆	☆			CCMT 3(2.5)1-MM
		CCMT 09 T3 08-MM												☆	☆	☆	★	☆									☆	★	☆	☆			CCMT 3(2.5)2-MM
		CCMT 12 04 04-MM	12	1/2										☆	☆	☆	★	☆									☆	★	☆	☆			CCMT 431-MM
		CCMT 12 04 08-MM												☆	☆	☆	★	☆									☆	★	☆	☆			CCMT 432-MM
		CCMT 12 04 12-MM													☆	★																	CCMT 433-MM
	CCMT-KM	CCMT 06 02 04-KM	06	1/4																☆			★	☆									CCMT 2(1.5)1-KM
		CCMT 06 02 08-KM																		☆			★	☆									CCMT 2(1.5)2-KM
		CCMT 09 T3 04-KM	09	3/8																☆			★	☆									CCMT 3(2.5)1-KM
		CCMT 09 T3 08-KM																		☆			★	☆									CCMT 3(2.5)2-KM
		CCMT 12 04 04-KM	12	1/2																☆		★	☆	☆									CCMT 431-KM
		CCMT 12 04 08-KM																		☆		★	☆	☆									CCMT 432-KM
	CCET-UM	CCET 06 02 01-UM	06	1/4	★								☆	★	☆										☆			★	☆				CCET 2(1.5)03-UM
		CCET 06 02 02-UM			★								☆	★	☆										☆			★	☆				CCET 2(1.5)0-UM
		CCET 06 02 04-UM			★								☆	★	☆										☆			★	☆				CCET 2(1.5)1-UM
	CCGT-UM	CCGT 06 02 01-UM	06	1/4										☆	☆									☆					★	☆		☆	CCGT 2(1.5)03-UM
		CCGT 06 02 02-UM				☆								☆	☆									☆					★	☆		☆	CCGT 2(1.5)0-UM
		CCGT 06 02 04-UM				☆						☆		☆	☆			☆						☆					★	☆		☆	CCGT 2(1.5)1-UM
		CCGT 09 T3 01-UM	09	3/8								☆		☆	☆									☆				★	☆	☆		☆	CCGT 3(2.5)03-UM
		CCGT 09 T3 02-UM				☆						☆		☆	☆									☆				★	☆	☆		☆	CCGT 3(2.5)0-UM
		CCGT 09 T3 04-UM				☆						☆		☆	☆									☆			☆	★	☆	☆		☆	CCGT 3(2.5)1-UM
		CCGT 09 T3 08-UM				☆						☆		☆	☆			☆						☆			☆	★	☆	☆		☆	CCGT 3(2.5)2-UM
		CCGT 12 04 04-UM	12	1/2																											★		CCGT 431-UM
		CCGT 12 04 08-UM																													★		CCGT 432-UM
	CCMW	CCMW 06 02 04	06	1/4																				☆									CCMW 2(1.5)1
		CCMW 09 T3 04	09	3/8								☆												☆									CCMW 3(2.5)1
	CCMT-UM	CCMT 06 02 04-UM	06	1/4		☆	☆			☆	☆	☆		☆	☆				☆										☆	☆			CCMT 2(1.5)1-UM
		CCMT 06 02 08-UM				☆				☆				☆	☆				☆										☆	☆			CCMT 2(1.5)2-UM
		CCMT 09 T3 04-UM	09	3/8		☆	☆		☆	☆				☆	☆		☆		☆					☆					☆	☆		☆	CCMT 3(2.5)1-UM
		CCMT 09 T3 08-UM				☆	☆		☆	☆		☆		☆	☆		☆		☆										☆	☆			CCMT 3(2.5)2-UM
		CCMT 12 04 08-UM	12	1/2						☆																							CCMT 432-UM
Roughing	CCMT-PR	CCMT 06 02 08-PR	06	1/4					☆	☆	★																						CCMT 2(1.5)2-PR
		CCMT 09 T3 08-PR	09	3/8					☆	★	☆																						CCMT 3(2.5)2-PR
		CCMT 09 T3 12-PR								★	☆																						CCMT 3(2.5)3-PR
		CCMT 12 04 08-PR	12	1/2					☆	★	☆																						CCMT 432-PR
		CCMT 12 04 12-PR							☆	★	☆																						CCMT 433-PR
					P25	P25	P15	P05	P15	P25	P35	P10	M15	M15	M25	M15	M25	M35	M35	K10	K05	K10	K15	K20	N25	N15	S15	S15	S15	S25	S10	S15	

★= First choice

SANDVIK Coromant

CoroTurn® 107

Rhombic 80°

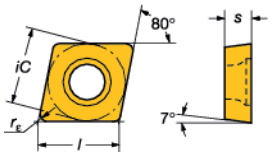

For ISO application areas, see bottom of the table.

		ISO	□	iC	P								M							K						N		S							ANSI
					GC	GC	GC	GC	GC	GC	GC	CT	GC	GC	GC	GC	GC	GC	GC	GC	GC	GC	GC	-	GC	-	GC	GC	GC	GC	GC	-	-		
					1125	1515	1525	4205	4215	4225	4235	5015	1105	1115	1125	2015	2025	2035	235	3005	3205	3210	3215	H13A	1125	H10	1005	1105	1115	1125	H10A	H13A		
Roughing	CCMT-MR	CCMT 06 02 08-MR	06	1/4												★		☆																	CCMT 2(1.5)2-MR
		CCMT 09 T3 08-MR	09	3/8												☆	★	☆																	CCMT 3(2.5)2-MR
		CCMT 09 T3 12-MR															★																		CCMT 3(2.5)3-MR
		CCMT 12 04 08-MR	12	1/2													★	☆																	CCMT 432-MR
		CCMT 12 04 12-MR															★	☆																	CCMT 433-MR
	CCMT-KR	CCMT 06 02 08-KR	06	1/4																			★	☆											CCMT 2(1.5)2-KR
		CCMT 09 T3 08-KR	09	3/8																			★	☆											CCMT 3(2.5)2-KR
		CCMT 09 T3 12-KR																					★												CCMT 3(2.5)3-KR
		CCMT 12 04 08-KR	12	1/2																	☆	★	☆	☆											CCMT 432-KR
		CCMT 12 04 12-KR																			☆	★	☆	☆											CCMT 433-KR
	CCMT-UR	CCMT 06 02 04-UR	06	1/4						☆									☆																CCMT 2(1.5)1-UR
		CCMT 09 T3 04-UR	09	3/8					☆	☆	☆								☆																CCMT 3(2.5)1-UR
		CCMT 09 T3 08-UR							☆	☆	☆								☆																CCMT 3(2.5)2-UR
		CCMT 12 04 08-UR	12	1/2						☆	☆																								CCMT 432-UR
Aluminum	CCGX-AL	CCGX 06 02 02-AL	06	1/4																						☆									CCGX 2(1.5)0-AL
		CCGX 06 02 04-AL																								☆									CCGX 2(1.5)1-AL
		CCGX 09 T3 04-AL	09	3/8																						☆									CCGX 3(2.5)1-AL
		CCGX 09 T3 08-AL																								☆									CCGX 3(2.5)2-AL
		CCGX 12 04 04-AL	12	1/2																						☆									CCGX 431-AL
		CCGX 12 04 08-AL																								☆									CCGX 432-AL
					P25	P25	P15	P05	P15	P25	P35	P10	M15	M15	M25	M15	M25	M35	M35	K10	K05	K10	K15	K20	N25	N15	S15	S15	S15	S25	S10	S15		

★= First choice

CoroTurn® 107

Square

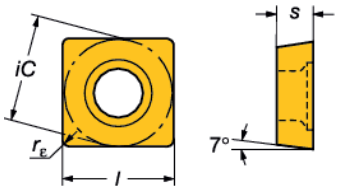

For ISO application areas, see bottom of the table.

		ISO	⌀	iC	P							M						K					N	S						ANSI
					GC	GC	GC	GC	GC	GC	CT	GC	GC	GC	GC	GC	GC	GC	GC	GC	GC	-	-	GC	GC	GC	GC	-		
					1515	1525	4205	4215	4225	4235	5015	1115	1125	2015	2025	2035	235	3005	3205	3210	3215	H13A	H10	1005	1105	1115	1125	H13A		
Finishing	SCMT-PF	SCMT 09 T3 04-PF	09	3/8	☆			★	☆		☆																			SCMT 3(2.5)1-PF
		SCMT 09 T3 08-PF			☆			★	☆		☆																			SCMT 3(2.5)2-PF
	SCMT-MF	SCMT 09 T3 04-MF	09	3/8								☆	☆		★											★	☆			SCMT 3(2.5)1-MF
		SCMT 09 T3 08-MF										☆	☆		★											★	☆			SCMT 3(2.5)2-MF
	SCMT-KF	SCMT 09 T3 04-KF	09	3/8														★												SCMT 3(2.5)1-KF
		SCMT 09 T3 08-KF																★												SCMT 3(2.5)2-KF
	SCMT-UF	SCMT 09 T3 08-UF	09	3/8					☆																					SCMT 3(2.5)2-UF
Medium	SCMT-PM	SCMT 09 T3 04-PM	09	3/8	☆	☆		☆	★	☆	☆																			SCMT 3(2.5)1-PM
		SCMT 09 T3 08-PM			☆	☆		☆	★	☆	☆																			SCMT 3(2.5)2-PM
		SCMT 12 04 04-PM	12	1/2	☆	☆		☆	★	☆																				SCMT 431-PM
		SCMT 12 04 08-PM			☆	☆		☆	★	☆	☆																			SCMT 432-PM
		SCMT 12 04 12-PM			☆			☆	★	☆																				SCMT 433-PM
	SCMT-MM	SCMT 09 T3 04-MM	09	3/8								☆	☆	☆	★	☆								☆	★	☆	☆			SCMT 3(2.5)1-MM
		SCMT 09 T3 08-MM										☆	☆	☆	★	☆								☆	★	☆	☆			SCMT 3(2.5)2-MM
		SCMT 12 04 04-MM	12	1/2								☆	☆		★	☆										★	☆			SCMT 431-MM
		SCMT 12 04 08-MM										☆	☆	☆	★	☆										★	☆			SCMT 432-MM
		SCMT 12 04 12-MM											☆		★	☆											★			SCMT 433-MM
	SCMT-KM	SCMT 09 T3 04-KM	09	3/8														☆			★	☆							☆	SCMT 3(2.5)1-KM
		SCMT 09 T3 08-KM																☆			★	☆							☆	SCMT 3(2.5)2-KM
		SCMT 12 04 08-KM	12	1/2																		★							☆	SCMT 432-KM
					P25	P15	P05	P15	P25	P35	P10	M15	M25	M15	M25	M35	M35	K10	K05	K10	K15	K20	N15	S15	S15	S15	S25	S15		

★= First choice

SANDVIK Coromant

CoroTurn® 107

Square

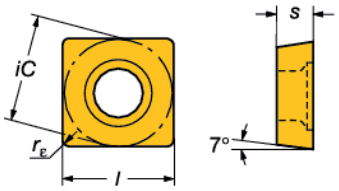

For ISO application areas, see bottom of the table.

		ISO	⧈	iC	P							M						K					N	S						ANSI
					GC	GC	GC	GC	GC	GC	CT	GC	GC	GC	GC	GC	GC	GC	GC	GC	GC	-	-	GC	GC	GC	GC	GC	-	
					1515	1525	4205	4215	4225	4235	5015	1115	1125	2015	2025	2035	235	3005	3205	3210	3215	H13A	H10	1005	1105	1115	1125	H13A	
Medium	SCMW	SCMW 09 T3 04	09	3/8																		☆						☆	SCMW 3(2.5)1
		SCMW 09 T3 08									☆						☆					☆						☆	SCMW 3(2.5)2
		SCMW 12 04 08	12	1/2							☆											☆						☆	SCMW 432
	SCMT-UM	SCMT 09 T3 08-UM	09	3/8	☆				☆			☆	☆		☆		☆									☆	☆		SCMT 3(2.5)2-UM
		SCMT 12 04 08-UM	12	1/2					☆						☆														SCMT 432-UM
		SCMT 12 04 12-UM							☆																				SCMT 433-UM
Roughing	SCMT-PR	SCMT 09 T3 08-PR	09	3/8			☆	☆	★	☆																			SCMT 3(2.5)2-PR
		SCMT 09 T3 12-PR							★	☆																			SCMT 3(2.5)3-PR
		SCMT 12 04 08-PR	12	1/2			☆	☆	★	☆																			SCMT 432-PR
		SCMT 12 04 12-PR						☆	★	☆																			SCMT 433-PR
	SCMT-MR	SCMT 09 T3 08-MR	09	3/8										☆	★	☆													SCMT 3(2.5)2-MR
		SCMT 09 T3 12-MR														★													SCMT 3(2.5)3-MR
		SCMT 12 04 08-MR	12	1/2											★	☆													SCMT 432-MR
		SCMT 12 04 12-MR													★	☆													SCMT 433-MR
	SCMT-KR	SCMT 09 T3 08-KR	09	3/8																	★	☆						☆	SCMT 3(2.5)2-KR
		SCMT 09 T3 12-KR																			★								SCMT 3(2.5)3-KR
		SCMT 12 04 08-KR	12	1/2															☆	★	☆	☆						☆	SCMT 432-KR
		SCMT 12 04 12-KR																	☆	★	☆	☆						☆	SCMT 433-KR
	SCMT-UR	SCMT 09 T3 08-UR	09	3/8				☆	☆	☆							☆												SCMT 3(2.5)2-UR
		SCMT 12 04 04-UR	12	1/2					☆																				SCMT 431-UR
		SCMT 12 04 08-UR							☆								☆												SCMT 432-UR
Aluminum	SCGX-AL	SCGX 09 T3 08-AL	09	3/8																			★						SCGX 3(2.5)2-AL
					P25	P15	P05	P15	P25	P35	P10	M15	M25	M15	M25	M35	M35	K10	K05	K10	K15	K20	N15	S15	S15	S15	S25	S15	

★= First choice

CoroTurn® 107

Triangular

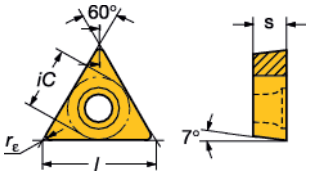

For ISO application areas, see bottom of the table.

		ISO	l	iC	P									M						K					N		S						ANSI
					GC 1125	GC 1515	GC 1525	GC 235	GC 4205	GC 4215	GC 4225	GC 4235	CT 5015	GC 1115	GC 1125	GC 2015	GC 2025	GC 2035	GC 235	GC 3005	GC 3205	GC 3210	GC 3215	- H13A	GC 1125	- H10	GC 1005	GC 1105	GC 1115	GC 1125	- H10A	- H13A	
Finishing	TCMX-WF	TCMX 09 02 02-WF	09	7/32	★								☆		★																		TCMX 1.8(1.5)0-WF
		TCMX 09 02 04-WF				☆	☆			★			☆	☆		★				☆			★						★				TCMX 1.8(1.5)1-WF
		TCMX 09 02 08-WF				★								★									★						★				TCMX 1.8(1.5)2-WF
		TCMX 11 03 02-WF	11	1/4	★								☆		★																		TCMX 220-WF
		TCMX 11 03 04-WF				☆	☆			★			☆	☆	☆	★				☆			★						★	☆			TCMX 221-WF
		TCMX 11 03 08-WF				☆	☆			★			☆	☆	☆	★				★									★	☆			TCMX 222-WF
		TCMX 16 T3 04-WF	16	3/8		☆							★	★									★						★				TCMX 3(2.5)1-WF
		TCMX 16 T3 08-WF				☆	☆			★			☆	☆		★													★				TCMX 3(2.5)2-WF
	TCMT-PF	TCMT 06 T1 02-PF	06	5/32		☆					★		☆																				TCMT 1.2(1.2)0-PF
		TCMT 06 T1 04-PF				☆				★	☆		☆																				TCMT 1.2(1.2)1-PF
		TCMT 06 T1 08-PF				☆				★	☆		☆																				TCMT 1.2(1.2)2-PF
		TCMT 09 02 02-PF	09	7/32		☆					★		☆																				TCMT 1.8(1.5)0-PF
		TCMT 09 02 04-PF				☆				★	☆		☆																				TCMT 1.8(1.5)1-PF
		TCMT 11 03 02-PF	11	1/4		☆					★		☆																				TCMT 220-PF
		TCMT 11 03 04-PF				☆				★	☆		☆																				TCMT 221-PF
		TCMT 11 03 08-PF				☆				★	☆		☆																				TCMT 222-PF
		TCMT 16 T3 04-PF	16	3/8		☆				★	☆		☆																				TCMT 3(2.5)1-PF
	TCMT-MF	TCMT 06 T1 02-MF	06	5/32										☆	★												★	☆	☆				TCMT 1.2(1.2)0-MF
		TCMT 06 T1 04-MF												☆	☆	★											★	☆	☆				TCMT 1.2(1.2)1-MF
		TCMT 06 T1 08-MF												☆	☆	★												★	☆				TCMT 1.2(1.2)2-MF
		TCMT 09 02 02-MF	09	7/32										☆	★												★	☆	☆				TCMT 1.8(1.5)0-MF
		TCMT 09 02 04-MF												☆	☆	★	☆										★	☆	☆				TCMT 1.8(1.5)1-MF
		TCMT 11 03 02-MF	11	1/4										☆	★												★	☆	☆				TCMT 220-MF
		TCMT 11 03 04-MF												☆	☆	★	☆										★	☆	☆				TCMT 221-MF
		TCMT 11 03 08-MF												☆	☆	★												★	☆				TCMT 222-MF
		TCMT 16 T3 04-MF	16	3/8										☆	☆	★	☆											★	☆				TCMT 3(2.5)1-MF
	TCMT-KF	TCMT 06 T1 02-KF	06	5/32																				★								☆	TCMT 1.2(1.2)0-KF
		TCMT 06 T1 04-KF																		☆			★	☆								☆	TCMT 1.2(1.2)1-KF
		TCMT 06 T1 08-KF																						★								☆	TCMT 1.2(1.2)2-KF
		TCMT 09 02 02-KF	09	7/32																				★								☆	TCMT 1.8(1.5)0-KF
		TCMT 09 02 04-KF																		☆				★								☆	TCMT 1.8(1.5)1-KF
		TCMT 11 03 02-KF	11	1/4																				★								☆	TCMT 220-KF
		TCMT 11 03 04-KF																		☆				★								☆	TCMT 221-KF
		TCMT 16 T3 04-KF	16	3/8																☆				★									TCMT 3(2.5)1-KF
	TCEX	TCEX 06 T1 00R/L-F	06	5/32	★										★										★								TCEX 1.2(1.2)00R/L-F
		TCEX 06 T1 01R/L-F			★										★										★								TCEX 1.2(1.2)03R/L-F
		TCEX 06 T1 02L-F			★										★										★								TCEX 1.2(1.2)0L-F
		TCEX 09 02 00R/L-F	09	7/32	☆								★		★										★								TCEX 1.8(1.5)00R/L-F
		TCEX 09 02 01R/L-F			☆								★		★										★								TCEX 1.8(1.5)03R/L-F
		TCEX 09 02 02L-F			☆								★		★										★								TCEX 1.8(1.5)0L-F
		TCEX 11 03 00R/L-F	11	1/4	☆								★		★										★								TCEX 22(00)R/L-F
		TCEX 11 03 01R/L-F			☆								★		★										★								TCEX 22(03)R/L-F
		TCEX 11 03 02L-F			☆								★		★										★								TCEX 220L-F
					P25	P25	P15	P45	P05	P15	P25	P35	P10	M15	M25	M15	M25	M35	M35	K10	K05	K10	K15	K20	N25	N15	S15	S15	S15	S25	S10	S15	

★= First choice
R = Right hand, L = Left hand

SANDVIK Coromant

CoroTurn® 107

Triangular

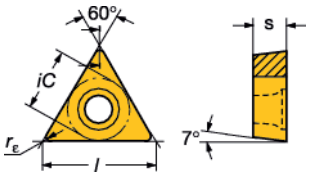

For ISO application areas, see bottom of the table.

		ISO		iC	P									M						K					N		S							ANSI
					GC	GC	GC	GC	GC	GC	GC	GC	CT	GC	GC	GC	GC	GC	GC	GC	GC	GC	GC	-	GC	-	GC	GC	GC	GC	-	-		
					1125	1515	1525	235	4205	4215	4225	4235	5015	1115	1125	2015	2025	2035	235	3005	3205	3210	3215	H13A	1125	H10	1005	1105	1115	1125	H10A	H13A		
Finishing	TCGX-WK	TCGX 06 T1 04R/L-WK	06	5/32		★								☆	★														★	☆				TCGX 1.2(1.2)1R/L-WK
		TCGX 09 02 04R/L-WK	09	7/32		★							☆	☆	★														★	☆				TCGX 1.8(1.5)1R/L-WK
		TCGX 11 02 04R/L-WK	11	1/4									★		★															★				TCGX 2(1.5)1R/L-WK
		TCGX 11 03 04R/L-WK	11	1/4		★							☆	☆	★														★	☆				TCGX 221R/L-WK
		TCGX 11 03 04R-WK				★								☆	★														★	☆				TCGX 221R-WK
	TCGT-K	TCGT 06 T1 02L-K	06	5/32		☆								☆	☆														☆	☆				TCGT 1.2(1.2)0L-K
		TCGT 06 T1 04L-K				☆								☆	☆														☆	☆				TCGT 1.2(1.2)1L-K
		TCGT 09 02 02L-K	09	7/32		☆	☆						☆	☆	☆														☆	☆				TCGT 1.8(1.5)0L-K
		TCGT 09 02 02R-K				☆								☆	☆														☆	☆				TCGT 1.8(1.5)0R-K
		TCGT 09 02 04L-K				☆	☆						☆	☆	☆														☆	☆				TCGT 1.8(1.5)1L-K
		TCGT 09 02 04R-K				☆								☆	☆														☆	☆				TCGT 1.8(1.5)1R-K
		TCGT 11 02 02L-K	11	1/4			☆						☆		☆															☆				TCGT 2(1.5)0L-K
		TCGT 11 02 02R-K													☆															☆				TCGT 2(1.5)0R-K
		TCGT 11 02 04L-K					☆						☆		☆															☆				TCGT 2(1.5)1L-K
		TCGT 11 02 04R-K													☆									☆						☆		☆		TCGT 2(1.5)1R-K
		TCGT 11 03 02L-K				☆								☆	☆														☆	☆				TCGT 220L-K
		TCGT 11 03 04L-K				☆								☆	☆														☆	☆				TCGT 221L-K
	TCMT-UF	TCMT 06 T1 02-UF	06	5/32															☆															TCMT 1.2(1.2)0-UF
		TCMT 06 T1 04-UF									☆								☆															TCMT 1.2(1.2)1-UF
		TCMT 09 02 04-UF	09	7/32							☆		☆																					TCMT 1.8(1.5)1-UF
		TCMT 09 02 08-UF											☆																					TCMT 1.8(1.5)2-UF
		TCMT 11 02 02-UF	11	1/4							☆	☆	☆		☆				☆					☆						☆		☆		TCMT 2(1.5)0-UF
		TCMT 11 02 04-UF								☆	☆	☆	☆		☆				☆				☆	☆							☆		☆		TCMT 2(1.5)1-UF
		TCMT 11 02 08-UF								☆	☆	☆	☆																					TCMT 2(1.5)2-UF
		TCMT 16 T3 08-UF	16	3/8						☆																								TCMT 3(2.5)2-UF
Medium	TCMX-WM	TCMX 11 03 04-WM	11	1/4		☆				★				★															★					TCMX 221-WM
		TCMX 11 03 08-WM								★	☆												★											TCMX 222-WM
		TCMX 16 T3 08-WM	16	3/8			☆		☆	★	☆											★	☆											TCMX 3(2.5)2-WM
	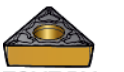 TCMT-PM	TCMT 09 02 04-PM	09	7/32		☆	☆			☆	★	☆	☆																					TCMT 1.8(1.5)1-PM
		TCMT 09 02 08-PM				☆	☆			☆	★	☆	☆																					TCMT 1.8(1.5)2-PM
		TCMT 11 03 04-PM	11	1/4		☆	☆			☆	★	☆	☆																					TCMT 221-PM
		TCMT 11 03 08-PM				☆	☆			☆	★	☆	☆																					TCMT 222-PM
		TCMT 11 03 12-PM									★																							TCMT 223-PM
		TCMT 16 T3 04-PM	16	3/8		☆	☆			☆	★	☆	☆																					TCMT 3(2.5)1-PM
		TCMT 16 T3 08-PM				☆	☆		☆	☆	★	☆	☆																					TCMT 3(2.5)2-PM
		TCMT 16 T3 12-PM				☆				☆	★	☆	☆																					TCMT 3(2.5)3-PM
		TCMT 22 04 08-PM	22	1/2								★																						TCMT 432-PM
	TCMT-MM	TCMT 09 02 04-MM	09	7/32										☆	☆	☆	★	☆											★	☆				TCMT 1.8(1.5)1-MM
		TCMT 09 02 08-MM												☆	☆	☆	★	☆											★	☆				TCMT 1.8(1.5)2-MM
		TCMT 11 03 04-MM	11	1/4										☆	☆	☆	★	☆										★	☆	☆				TCMT 221-MM
		TCMT 11 03 08-MM												☆	☆	☆	★	☆										★	☆	☆				TCMT 222-MM
		TCMT 16 T3 04-MM	16	3/8										☆	☆	☆	★	☆										★	☆	☆				TCMT 3(2.5)1-MM
		TCMT 16 T3 08-MM												☆	☆	☆	★	☆									☆	★	☆	☆				TCMT 3(2.5)2-MM
		TCMT 16 T3 12-MM												☆	☆		★												★	☆				TCMT 3(2.5)3-MM
		TCMT 22 04 08-MM	22	1/2														★																TCMT 432-MM
	TCMT-KM	TCMT 09 02 04-KM	09	7/32																☆			★	☆								☆		TCMT 1.8(1.5)1-KM
		TCMT 09 02 08-KM																		☆			★	☆								☆		TCMT 1.8(1.5)2-KM
		TCMT 11 03 04-KM	11	1/4																☆			★	☆								☆		TCMT 221-KM
		TCMT 11 03 08-KM																		☆			★	☆								☆		TCMT 222-KM
		TCMT 16 T3 04-KM	16	3/8																☆		★	☆	☆								☆		TCMT 3(2.5)1-KM
		TCMT 16 T3 08-KM																		☆		★	☆	☆								☆		TCMT 3(2.5)2-KM
		TCMT 16 T3 12-KM																						★								☆		TCMT 3(2.5)3-KM
		TCMT 22 04 08-KM	22	1/2																				★								☆		TCMT 432-KM
					P25	P25	P15	P45	P05	P15	P25	P35	P10	M15	M25	M15	M25	M35	M35	K10	K05	K10	K15	K20	N25	N15	S15	S15	S15	S25	S10	S15		

★= First choice

R = Right hand, L = Left hand

CoroTurn® 107

Triangular

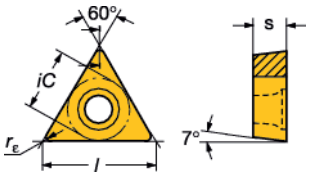

For ISO application areas, see bottom of the table.

		ISO		iC	P									M						K					N		S						ANSI
					GC	GC	GC	GC	GC	GC	GC	GC	CT	GC	GC	GC	GC	GC	GC	GC	GC	GC	GC	-	GC	-	GC	GC	GC	GC	GC	-	-	
					1125	1515	1525	235	4205	4215	4225	4235	5015	1115	1125	2015	2025	2035	235	3005	3205	3210	3215	H13A	1125	H10	1005	1105	1115	1125	H10A	H13A	
Medium	TCGT-UM	TCGT 09 02 04-UM	09	7/32									☆																			★		TCGT 1.8(1.5)1-UM
		TCGT 11 02 01-UM	11	1/4									☆		☆									☆						★		☆	TCGT 2(1.5)03-UM
		TCGT 11 02 02-UM											☆		☆									☆						★		☆	TCGT 2(1.5)0-UM
		TCGT 11 02 04-UM											☆		☆									☆						★		☆	TCGT 2(1.5)1-UM
		TCGT 11 02 08-UM											☆		☆			☆						☆						★		☆	TCGT 2(1.5)2-UM
		TCGT 11 03 01-UM	11	1/4									☆		☆															★			TCGT 22(03)-UM
		TCGT 11 03 02-UM				☆							☆	☆	☆														★	☆			TCGT 220-UM
		TCGT 11 03 04-UM				☆							☆	☆	☆														★	☆			TCGT 221-UM
		TCGT 11 03 08-UM				☆							☆	☆	☆														★	☆			TCGT 222-UM
		TCGT 16 T3 04-UM	16	3/8									☆														☆	★			☆		TCGT 3(2.5)1-UM
		TCGT 16 T3 08-UM																										★					TCGT 3(2.5)2-UM
	TCMW	TCMW 11 02 04	11	1/4									☆											☆		☆						☆	TCMW 2(1.5)1
		TCMW 11 03 04	11	1/4																			☆	☆								☆	TCMW 221
		TCMW 16 T3 04	16	3/8																				☆								☆	TCMW 3(2.5)1
		TCMW 16 T3 08											☆											☆								☆	TCMW 3(2.5)2
	TCMT-UM	TCMT 09 02 04-UM	09	7/32		☆	☆				☆		☆	☆	☆				☆										☆	☆			TCMT 1.8(1.5)1-UM
		TCMT 09 02 08-UM					☆				☆								☆														TCMT 1.8(1.5)2-UM
		TCMT 11 02 04-UM	11	1/4			☆			☆	☆	☆	☆		☆	☆	☆		☆					☆						☆		☆	TCMT 2(1.5)1-UM
		TCMT 11 02 08-UM					☆			☆	☆	☆	☆		☆	☆	☆		☆					☆						☆		☆	TCMT 2(1.5)2-UM
		TCMT 16 T3 04-UM	16	3/8		☆					☆			☆	☆				☆										☆	☆			TCMT 3(2.5)1-UM
		TCMT 16 T3 08-UM				☆				☆	☆			☆	☆				☆										☆	☆			TCMT 3(2.5)2-UM
Roughing	TCMT-PR	TCMT 11 03 08-PR	11	1/4						☆	★	☆																					TCMT 222-PR
		TCMT 11 03 12-PR									★																						TCMT 223-PR
		TCMT 16 T3 08-PR	16	3/8						☆	★	☆																					TCMT 3(2.5)2-PR
		TCMT 16 T3 12-PR								☆	★	☆																					TCMT 3(2.5)3-PR
		TCMT 22 04 08-PR	22	1/2								★																					TCMT 432-PR
		TCMT 22 04 12-PR										★																					TCMT 433-PR
	TCMT-MR	TCMT 11 03 08-MR	11	1/4													★	☆															TCMT 222-MR
		TCMT 16 T3 08-MR	16	3/8												☆	★	☆									☆	★					TCMT 3(2.5)2-MR
		TCMT 16 T3 12-MR															★	☆															TCMT 3(2.5)3-MR
		TCMT 22 04 08-MR	22	1/2														★															TCMT 432-MR
		TCMT 22 04 12-MR																★															TCMT 433-MR
	TCMT-KR	TCMT 11 03 08-KR	11	1/4																			★										TCMT 222-KR
		TCMT 11 03 12-KR																					★										TCMT 223-KR
		TCMT 16 T3 08-KR	16	3/8																	☆	★	☆	☆								☆	TCMT 3(2.5)2-KR
		TCMT 16 T3 12-KR																			☆	★	☆	☆								☆	TCMT 3(2.5)3-KR
		TCMT 22 04 08-KR	22	1/2																			★	☆								☆	TCMT 432-KR
		TCMT 22 04 12-KR																					★	☆								☆	TCMT 433-KR
	TCMT-UR	TCMT 11 02 04-UR	11	1/4						☆	☆	☆							☆					☆									☆	TCMT 2(1.5)1-UR
		TCMT 11 02 08-UR					☆			☆	☆	☆					☆		☆				☆	☆									☆	TCMT 2(1.5)2-UR
		TCMT 16 T3 04-UR	16	3/8						☆	☆								☆														TCMT 3(2.5)1-UR
		TCMT 16 T3 08-UR								☆	☆	☆							☆														TCMT 3(2.5)2-UR
		TCMT 16 T3 12-UR									☆						☆																TCMT 3(2.5)3-UR
Aluminum	TCGX-AL	TCGX 06 T1 04-AL	06	5/32																						★							TCGX 1.2(1.2)1-AL
		TCGX 09 02 02-AL	09	7/32																						☆							TCGX 1.8(1.5)0-AL
		TCGX 09 02 04-AL																								☆							TCGX 1.8(1.5)1-AL
		TCGX 11 02 02-AL	11	1/4																						☆							TCGX 2(1.5)0-AL
		TCGX 11 02 04-AL																								☆							TCGX 2(1.5)1-AL
		TCGX 11 02 08-AL																								★							TCGX 2(1.5)2-AL
		TCGX 11 03 02-AL	11	1/4																						★							TCGX 220-AL
		TCGX 11 03 04-AL																								★							TCGX 221-AL
		TCGX 11 03 08-AL																								★							TCGX 222-AL
		TCGX 16 T3 04-AL	16	3/8																						☆							TCGX 3(2.5)1-AL
		TCGX 16 T3 08-AL																								☆							TCGX 3(2.5)2-AL
					P25	P25	P15	P45	P05	P15	P25	P35	P10	M15	M25	M15	M25	M35	M35	K10	K05	K10	K15	K20	N25	N15	S15	S15	S15	S25	S10	S15	

★= First choice

SANDVIK Coromant

CoroTurn® 111

Triangular

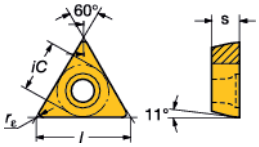

For ISO application areas, see bottom of the table.

		ISO		iC	P						M				K		S		ANSI
					GC 1515	GC 1525	GC 4215	GC 4225	GC 4235	CT 5015	GC 1125	GC 2015	GC 2025	GC 2035	GC 3215	- H13A	GC 1125	- H13A	
Finishing	TPMT-PF	TPMT 06 T1 02-PF	06	5/32	☆					★									TPMT 1.2(1.2)0-PF
		TPMT 06 T1 04-PF			☆		★	☆		☆									TPMT 1.2(1.2)1-PF
		TPMT 09 02 02-PF	09	7/32	☆					★									TPMT 1.8(1.5)0-PF
		TPMT 09 02 04-PF			☆		★	☆		☆									TPMT 1.8(1.5)1-PF
		TPMT 11 03 02-PF	11	1/4	☆					★									TPMT 220-PF
		TPMT 11 03 04-PF			☆		★	☆		☆									TPMT 221-PF
	TPMT-MF	TPMT 06 T1 02-MF	06	5/32							★								TPMT 1.2(1.2)0-MF
		TPMT 06 T1 04-MF									☆	★							TPMT 1.2(1.2)1-MF
		TPMT 09 02 02-MF	09	7/32							★								TPMT 1.8(1.5)0-MF
		TPMT 09 02 04-MF									☆	★							TPMT 1.8(1.5)1-MF
		TPMT 11 03 02-MF	11	1/4							★								TPMT 220-MF
		TPMT 11 03 04-MF									☆	★	☆						TPMT 221-MF
	TPMT-KF	TPMT 06 T1 04-KF	06	5/32											★				TPMT 1.2(1.2)1-KF
		TPMT 09 02 04-KF	09	7/32											★				TPMT 1.8(1.5)1-KF
		TPMT 11 03 04-KF	11	1/4											★				TPMT 221-KF
Medium	TPMT-PM	TPMT 09 02 04-PM	09	7/32	☆	☆	☆	★	☆										TPMT 1.8(1.5)1-PM
		TPMT 09 02 08-PM						★	☆										TPMT 1.8(1.5)2-PM
		TPMT 11 03 04-PM	11	1/4		☆	☆	★	☆										TPMT 221-PM
		TPMT 11 03 08-PM					☆	★	☆	☆									TPMT 222-PM
	TPMT-MM	TPMT 09 02 04-MM	09	7/32									★	☆					TPMT 1.8(1.5)1-MM
		TPMT 11 03 04-MM	11	1/4							☆		★						TPMT 221-MM
		TPMT 11 03 08-MM									☆		★	☆					TPMT 222-MM
	TPMT-KM	TPMT 09 02 04-KM	09	7/32												★		☆	TPMT 1.8(1.5)1-KM
		TPMT 09 02 08-KM													★				TPMT 1.8(1.5)2-KM
		TPMT 11 03 08-KM	11	1/4											★				TPMT 222-KM
	TPMT-UM	TPMT 11 02 04-UM	11	1/4							☆						☆		TPMT 2(1.5)1-UM
		TPMT 11 02 08-UM									☆						☆		TPMT 2(1.5)2-UM
					P25	P15	P15	P25	P35	P10	M25	M15	M25	M35	K15	K20	S25	S15	

★= First choice

Negative basic shape inserts

Negative basic shape inserts – T-Max P

Rhombic 80°

CNGA

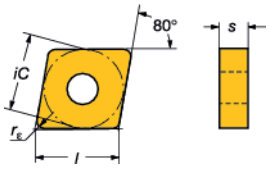

CNGQ

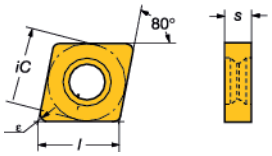

For ISO application areas, see bottom of the table.

Note! Grade CB7025 is uncoated.

	ISO	☐	iC	l_a mm	l_a inch	K CC 1690	K CC 6190	K CC 620	K CC 650	K CB 7525	S CC 650	H CC 6050	H CC 650	H CB 7015	H CB 7025	H CB 7035	H CB 7525	H CB CB20	ANSI
	CNGA090304S01530B	09	3/8	1.8	.071											☆			CNGA321S0630B
	CNGA090308S01530B			2.0	.079											☆			CNGA322S0630B
	CNGA120404S01530B	12	1/2	1.8	.071											☆			CNGA431S0630B
	CNGA120408S01530B			2.0	.079											☆			CNGA432S0630B
	CNGA120408S01530B			2.7	.106												☆		CNGA432S0630B
	CNGA120408S02035B			2.0	.079											☆			CNGA432S0835B
	CNGA120412S01530B			2.3	.091											☆			CNGA433S0630B
	CNGA120412S01530B			2.7	.106												☆		CNGA433S0630B
	CNGA120412S02035B			2.3	.091											☆			CNGA433S0835B
	CNGA120416S01530B			2.7	.106											☆			CNGA434S0630B
	CNGA120416S02035B			2.7	.106											☆			CNGA434S0835B
	CNGA120404S01530BWH	12	1/2	1.8	.071											☆			CNGA431S0630BWH
	CNGA120408S01530BWG			2.0	.079											☆			CNGA432S0630BWG
	CNGA120408S01530BWH			2.0	.079											☆			CNGA432S0630BWH
	CNGA120412S01530BWG			2.3	.091											☆			CNGA433S0630BWG
	CNGA120412S01530BWH			2.3	.091											☆			CNGA433S0630BWH
	CNGA120408T01020WG	12	1/2				☆		☆		☆		☆						CNGA432T0320WG
	CNGA120412T01020WG						☆		☆		☆		☆						CNGA433T0320WG
	CNGA120416T01020WG						☆												CNGA434T0320WG
	CNGQ 120708 T02520WG	12	1/2				☆												CNGQ452T0820WG
	CNGQ120712T02520WG						☆												CNGQ453T0820WG
	CNGA120404S01525WH	12	1/2									☆							CNGA431S0625WH
	CNGA120408S01525WH											☆							CNGA432S0625WH
	CNGA120412S01525WH											☆							CNGA433S0625WH
	CNGA120408T01525WH											☆							CNGA432T0625WH
	CNGA 12 04 04S01525	12	1/2									☆							CNGA431S0625
	CNGA 12 04 08S01525											☆							CNGA432S0625
	CNGA 12 04 12S01525											☆							CNGA433S0625
	CNGA 12 04 08T01525											☆							CNGA432T0625
	CNGA 12 04 08T01020	12	1/2						☆		☆		☆						CNGA432T0320
	CNGA 12 04 12T01020								☆		☆		☆						CNGA433T0320
	CNGA 12 04 16T01020								☆		☆		☆						CNGA434T0320
	CNGA 16 06 08T01020	16	5/8						☆		☆		☆						CNGA542T0320
	CNGA 16 06 12T01020								☆		☆		☆						CNGA543T0320
	CNGA 12 04 08T02520	12	1/2			☆	☆	☆											CNGA432T0820
	CNGA 12 04 12T02520					☆	☆												CNGA433T0820
	CNGA 12 04 16T02520					☆	☆												CNGA434T0820
	CNGA 16 06 12T02520	16	5/8				☆												CNGA543T0820
	CNGA 16 06 16T02520					☆	☆												CNGA544T0820
	CNGA 19 06 16T02520	19	3/4				☆												CNGA644T0820
						K10	K10	K01	K01	K05	S05	H05	H05	H15	H25	H30	H30	H01	

SANDVIK Coromant

Negative basic shape inserts

Negative basic shape inserts – T-Max P

Rhombic 80°

CNGA

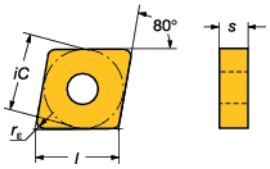

CNGQ

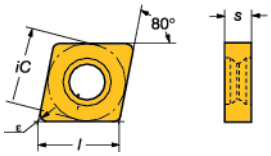

For ISO application areas, see bottom of the table.

Note! Grade CB7025 is uncoated.

	ISO	⬚	iC	l_a mm	l_a inch	K CC 1690	K CC 6190	K CC 620	K CC 650	K CB 7525	S CC 650	H CC 6050	H CC 650	H CB 7015	H CB 7025	H CB 7035	H CB 7525	H CB CB20	ANSI
	CNGQ 12 07 08T02520	12	1/2				☆												CNGQ452T0820
	CNGQ 12 07 12T02520						☆												CNGQ453T0820
	CNGQ 12 07 16T02520						☆												CNGQ454T0820
	CNGX120712T02520	12	1/2				☆												CNGX453T0820
	CNGX120716T02520						☆												CNGX454T0820
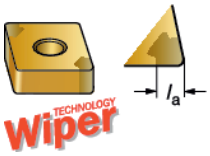	CNGA120408S01030AWG	12	1/2	2.7	.106									☆	☆				CNGA432S0330AWG
	CNGA120412S01030AWG			2.7	.106									☆	☆				CNGA433S0330AWG
	CNGA090304S01030AWH	09	3/8	2.3	.091										☆				CNGA321S0330AWH
	CNGA090308S01030AWH			2.2	.087										☆				CNGA322S0330AWH
	CNGA120404S01030AWH	12	1/2	2.8	.110										☆				CNGA431S0330AWH
	CNGA120408S01030AWH			2.7	.106									☆	☆				CNGA432S0330AWH
	CNGA120412S01030AWH			2.7	.106										☆				CNGA433S0330AWH
	CNGA090304T01030AWH	09	3/8	2.3	.091									☆					CNGA321T0330AWH
	CNGA090308T01030AWH			2.2	.087									☆					CNGA322T0330AWH
	CNGA120404T01030AWH	12	1/2	2.8	.110									☆					CNGA431T0330AWH
	CNGA120408T01030AWH			2.7	.106									☆					CNGA432T0330AWH
	CNGA120412T01030AWH			2.7	.106									☆					CNGA433T0330AWH
	CNGA120404T01020BWG	12	1/2	2.8	.110					☆							☆		CNGA431T0320BWG
	CNGA120408T01020BWG			2.7	.106					☆							☆		CNGA432T0320BWG
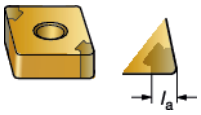	CNGA090304S01030A	09	3/8	2.3	.091									☆	☆				CNGA321S0330A
	CNGA090308S01030A			2.2	.087									☆	☆				CNGA322S0330A
	CNGA120404S01030A	12	1/2	2.8	.110									☆	☆				CNGA431S0330A
	CNGA120408S01030A			2.7	.106									☆	☆				CNGA432S0330A
	CNGA120412S01030A			2.7	.106									☆	☆				CNGA433S0330A
	CNGA120416S01030A			1.5	.059									☆	☆				CNGA434S0330A
						K10	K10	K01	K01	K05	S05	H05	H05	H15	H25	H30	H30	H01	

Negative basic shape inserts

Negative basic shape inserts – T-Max P

Rhombic 80°

CNGA, CNMA

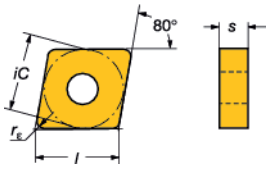

CNGX-AXA

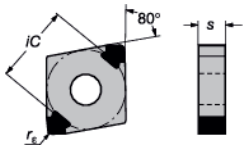

For ISO application areas, see bottom of the table.

Note! Grade CB7025 is uncoated.

	ISO	⊡	iC	l_a mm	l_a inch	K					S	H							ANSI
						CC	CC	CC	CC	CB	CC	CC	CC	CB	CB	CB	CB	CB	
						1690	6190	620	650	7525	650	6050	650	7015	7025	7035	7525	CB20	
	CNGA120404T01020B	12	1/2	2.8	.110					☆							☆		CNGA431T0320B
	CNGA120408T01020B			2.7	.106					☆							☆		CNGA432T0320B
	CNGA120412T01020B			2.7	.106					☆							☆		CNGA433T0320B
	CNGX1204L025-18AXA	12	1/2	.3	.011									☆	☆	☆			CNGX1204L025-18AXA
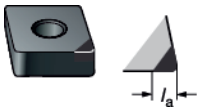	CNMA120404S01020E	12	1/2	2.8	.110													☆	CNMA431S0320E
	CNMA120408S01020E			2.8	.110													☆	CNMA432S0320E
	CNMA120412S01020E			2.7	.106													☆	CNMA433S0320E
						K10	K10	K01	K01	K05	S05	H05	H05	H15	H25	H30	H30	H01	

SANDVIK Coromant

Negative basic shape inserts

Negative basic shape inserts – T-Max®

Rhombic 80°

CNGN/CNG

For ISO application areas, see bottom of the table.

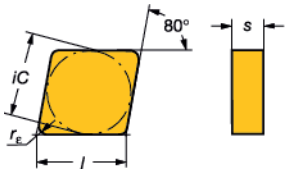

	ISO	□	iC	l_a inch	K					S				H		ANSI
					CC	CC	CC	CC	CB	CC	CC	CC	CC	CC	CC	
					1690	6190	620	650	7925	6060	6065	650	670	650	670	
	CNGN120408E	12	1/2								☆					CNG432A
	CNGN120412E										☆					CNG433A
	CNGN120708E										☆					CNG452A
	CNGN120712E										☆					CNG453A
	CNGN 12 04 08T01020							☆				☆	☆	☆	☆	CNG432T0320
	CNGN 12 04 12T01020							☆				☆	☆	☆	☆	CNG433T0320
	CNGN 12 04 16T01020							☆				☆	☆	☆	☆	CNG434T0320
	CNGN 12 07 08T01020							☆		☆		☆	☆	☆	☆	CNG452T0320
	CNGN 12 07 12T01020							☆		☆		☆	☆	☆	☆	CNG453T0320
	CNGN 12 07 16T01020							☆		☆		☆	☆	☆	☆	CNG454T0320
	CNGN 16 07 08T01020	16	5/8					☆				☆		☆		CNG552T0320
	CNGN 16 07 12T01020							☆				☆	☆	☆	☆	CNG553T0320
	CNGN 16 07 16T01020							☆				☆		☆		CNG554T0320
	CNGN 12 04 08T02520	12	1/2			☆										CNG432T0820
	CNGN 12 04 12T02520				☆	☆		☆				☆	☆	☆	☆	CNG433T0820
	CNGN 12 04 16T02520				☆	☆										CNG434T0820
	CNGN 12 07 08T02520				☆	☆										CNG452T0820
	CNGN 12 07 12T02520				☆	☆	☆	☆				☆		☆		CNG453T0820
	CNGN 12 07 16T02520				☆	☆										CNG454T0820
	CNGN120412S02520M	12	1/2						☆							CNG433S0820M
	CNGN120416S02520M								☆							CNG434S0820M
					K10	K10	K01	K01	K05	S10	S15	S05	S15	H05	H10	

Negative basic shape inserts

Negative basic shape inserts – T-Max P

Square

SNGA/SNMA

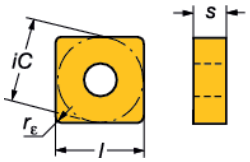

SNGQ

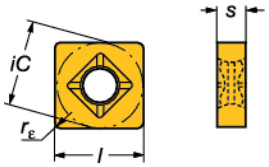

For ISO application areas, see bottom of the table.

Note! Grade CB7025 is uncoated.

	ISO	⊡	iC	l_a mm	l_a inch	K				S	H						ANSI
						CC	CC	CC	CB	CC	CC	CC	CB	CB	CB	CB	
						1690	6190	650	7525	650	6050	650	7015	7025	7035	7525	CB20	
	SNGA120408S01530B	12	1/2	2.1	.083										☆			SNGA432S0630B
	SNGA120412S01530B			2.8	.110										☆			SNGA433S0630B
	SNGA120408S01525	12	1/2								☆							SNGA432S0625
	SNGA120412S01525										☆							SNGA433S0625
	SNGA120408T01525										☆							SNGA432T0625
	SNGA 12 04 08T01020	12	1/2					☆		☆		☆						SNGA432T0320
	SNGA 12 04 12T01020							☆		☆		☆						SNGA433T0320
	SNGA120416T01020							☆		☆		☆						SNGA434T0320
	SNGA 12 04 08T02520					☆	☆											SNGA432T0820
	SNGA 12 04 12T02520					☆	☆											SNGA433T0820
	SNGA 12 04 16T02520						☆											SNGA434T0820
	SNGQ 120708 T02520	12	1/2				☆											SNGQ452T0820
	SNGQ 120712 T02520						☆											SNGQ453T0820
	SNGQ 120716 T02520						☆											SNGQ454T0820
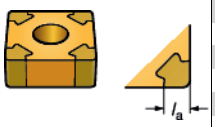	SNGA120408S01030A	12	1/2	2.7	.106								☆	☆				SNGA432S0330A
	SNGA120412S01030A			2.7	.106								☆	☆				SNGA433S0330A
	SNGA120408T01020B	12	1/2	2.7	.106				☆							☆		SNGA432T0320B
	SNGA120412T01020B			2.7	.106				☆							☆		SNGA433T0320B
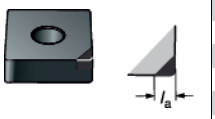	SNMA120408S01020E	12	1/2	3.4	.134												☆	SNMA432S0320E
	SNMA120412S01020E			3.4	.134												☆	SNMA433S0320E
						K10	K10	K01	K05	S05	H05	H05	H15	H25	H30	H30	H01	

SANDVIK Coromant

Negative basic shape inserts

Negative basic shape inserts – T-Max®

Square

SNGN/SNG

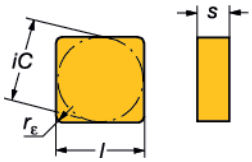

For ISO application areas, see bottom of the table.

	ISO	⬚	iC	K						N	S				H			ANSI
				CC	CC	CC	CC	CB	CB	CD	CC	CC	CC	CC	CC	CC	CB	
				1690	6190	620	650	7925	CB50	CD10	6060	6065	650	670	650	670	CB50	
	SNGN120412E	12	1/2									☆						SNG433A
	SNGN120712E										☆							SNG453A
	SNGN190724E	19	3/4								☆							SNG656A
	SNGN 12 04 08T01020	12	1/2				☆						☆	☆	☆	☆		SNG432T0320
	SNGN 12 04 12T01020						☆						☆	☆	☆	☆		SNG433T0320
	SNGN 12 04 16T01020						☆						☆	☆	☆	☆		SNG434T0320
	SNGN 12 07 08T01020						☆						☆	☆	☆	☆		SNG452T0320
	SNGN 12 07 12T01020						☆				☆		☆	☆	☆	☆		SNG453T0320
	SNGN 12 07 16T01020						☆						☆	☆	☆	☆		SNG454T0320
	SNGN 15 07 08T01020	15	5/8				☆						☆		☆			SNG552T0320
	SNGN 15 07 12T01020													☆		☆		SNG553T0320
	SNGN 15 07 16T01020						☆						☆	☆	☆	☆		SNG554T0320
	SNGN 12 04 08T02520	12	1/2		☆													SNG432T0820
	SNGN 12 04 12T02520				☆		☆						☆		☆			SNG433T0820
	SNGN 12 04 16T02520			☆	☆													SNG434T0820
	SNGN 12 07 08T02520				☆	☆												SNG452T0820
	SNGN 12 07 12T02520			☆	☆	☆	☆						☆		☆			SNG453T0820
	SNGN 12 07 16T02520			☆	☆	☆												SNG454T0820
	SNGN 15 07 16T02520	15	5/8		☆	☆												SNG554T0820
	SNGN 12 07 16T15015	12	1/2				☆						☆		☆			SNG454T6015
	SNGN 12 07 16K15015						☆						☆		☆			SNG454K6015
	SNGN120408FD	12	1/2						☆								☆	SNG432FD
	SNGN120412FD								☆								☆	SNG433FD
	SNGN120416FD								☆								☆	SNG434FD
				K10	K10	K01	K01	K05	K05	N05	S10	S15	S05	S15	H05	H10	H05	

Negative basic shape inserts

Negative basic shape inserts – T-Max P

Triangular

TNGA, TNMA

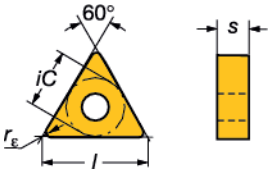

For ISO application areas, see bottom of the table.

Note! Grade CB7025 is uncoated.

	ISO		iC	l_a mm	l_a inch	K					S	H							ANSI
						CC	CC	CC	CC	CB	CC	CC	CC	CB	CB	CB	CB	CB	
						1690	6190	620	650	7525	650	6050	650	7015	7025	7035	7525	CB20	
	TNGA 22 04 08T01020	22	1/2						☆		☆		☆						TNGA432T0320
	TNGA 22 04 12T01020								☆		☆		☆						TNGA433T0320
	TNGA 22 04 16T01020								☆		☆		☆						TNGA434T0320
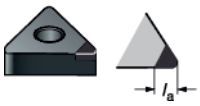	TNMA220408S01020E	22	1/2	3.2	.126													☆	TNMA432S0320E
	TNMA220412S01020E			2.9	.114													☆	TNMA433S0320E
						K10	K10	K01	K01	K05	S05	H05	H05	H15	H25	H30	H30	H01	

SANDVIK Coromant

Negative basic shape inserts

Negative basic shape inserts – T-Max®

Triangular

TNGN/TNG

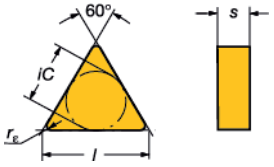

For ISO application areas, see bottom of the table.

	ISO	⊿	iC	K				N	S		H			ANSI
				CC	CC	CB	CB	CD	CC	CC	CC	CC	CB	
				6090	650	7925	CB50	CD10	650	670	650	670	CB50	
	TNGN 22 04 08T01020	22	1/2							☆		☆		TNG 432T0320
	TNGN220412FD	22	1/2				☆						☆	TNG 433FD
				K10	K01	K05	K05	N05	S05	S15	H05	H10	H05	

Positive basic shape inserts

Positive basic shape inserts – CoroTurn® 107

Rhombic 80°

CCGW, CCMW

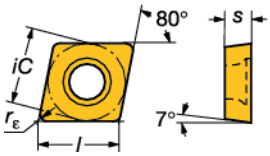

For ISO application areas, see bottom of the table.

Note! Grade CB7025 is uncoated.

	ISO	□	iC	l_a mm	l_a inch	K CB 7525	N CD 1810	N CD CD10	H CB 7015	H CB 7025	H CB 7035	H CB 7525	ANSI
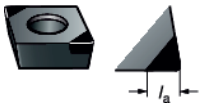	CCGW060202T01530F	06	1/4	1.5	.059						☆		CCGW2(1.5)0T0630F
	CCGW09T304S01020FWH	09	3/8	2.6	.102					☆			CCGW3(2.5)1S0320FW
	CCGW09T308S01020FWH			2.6	.102					☆			CCGW3(2.5)2S0320FW
	CCGW09T312S01020FWH			2.6	.102				☆				CCGW3(2.5)3S0320FW
	CCGW09T304T01020FWH			2.6	.102				☆				CCGW3(2.5)1T0320FW
	CCGW09T308T01020FWH			2.5	.098				☆				CCGW3(2.5)2T0320FW
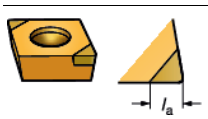	CCGW060202T01030F	06	1/4	1.5	.059				☆	☆			CCGW2(1.5)0T0330F
	CCGW060204S01030F			1.8	.071				☆	☆			CCGW2(1.5)1S0330F
	CCGW060204S01030F			2.8	.110							☆	CCGW2(1.5)1S0330F
	CCGW060208S01030F			2.0	.079				☆	☆			CCGW2(1.5)2S0330F
	CCGW09T304S01020F	09	3/8	2.6	.102				☆	☆			CCGW3(2.5)1S0320F
	CCGW09T308S01020F			2.5	.098				☆	☆			CCGW3(2.5)2S0320F
	CCGW09T312S01020F			2.6	.102				☆				CCGW3(2.5)3S0320F
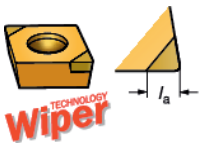	CCGW060204T01030FWH	06	1/4	1.8	.071				☆	☆			CCGW2(1.5)1T0330FW
	CCGW060208T01030FWH			2.0	.079				☆	☆			CCGW2(1.5)2T0330FW
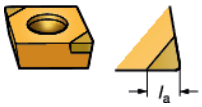	CCGW060204T01020F	06	1/4	2.8	.110	☆							CCGW2(1.5)1T0320F
	CCGW09T304T01020F	09	3/8	2.8	.110	☆							CCGW3(2.5)1T0320F
	CCGW09T308T01020F			3.0	.118	☆							CCGW3(2.5)2T0320F
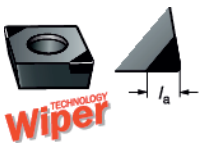	CCGW060204S01520FWH	06	1/4	1.8	.071						☆		CCGW2(1.5)1S0520FW
	CCGW060204S01530FWH			1.8	.071						☆		CCGW2(1.5)1S0530FW
	CCGW060208S01520FWH			2.0	.079						☆		CCGW2(1.5)2S0520FW
	CCGW060208S01530FWH			2.0	.079						☆		CCGW2(1.5)2S0530FW
	CCGW09T304S01530FWH	09	3/8	1.8	.071						☆		CCGW3(2.5)1S0530FW
	CCGW09T308S01530FWH			2.0	.079						☆		CCGW3(2.5)2S0530FW
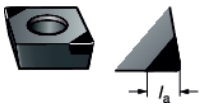	CCGW060204S01520F	06	1/4	1.8	.071						☆		CCGW2(1.5)1S0520F
	CCGW060204S01530F			1.8	.071						☆		CCGW2(1.5)1S0530F
	CCGW060208S01520F			2.0	.079						☆		CCGW2(1.5)2S0520F
	CCGW060208S01530F			2.0	.079						☆		CCGW2(1.5)2S0530F
	CCGW09T304S01530F	09	3/8	1.8	.071						☆		CCGW3(2.5)1S0530F
	CCGW09T304S01530F			2.8	.110							☆	CCGW3(2.5)1S0530F
	CCGW09T308S01530F			2.0	.079						☆		CCGW3(2.5)2S0530F
	CCGW09T308S01530F			3	.118							☆	CCGW3(2.5)2S0530F
						K05	N10	N05	H15	H25	H30	H30	

SANDVIK Coromant

Positive basic shape inserts

Positive basic shape inserts – T-Max®

Square

SPGN/SPG, SPUN/SPU

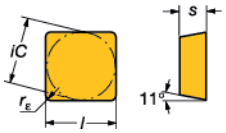

SCGW

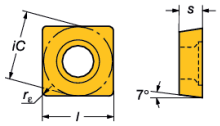

For ISO application areas, see bottom of the table.

	ISO	□	iC	l_a mm	l_a inch	K						N	S				H			ANSI
						CC	CC	CC	CC	CB	CB	CD	CC	CC	CC	CC	CC	CC	CB	
						1690	6190	620	650	7925	CB50	CD10	6060	6065	650	670	650	670	CB50	
	SPGN 12 04 08T01020	12	1/2						☆						☆		☆			SPG432T0320
	SPGN 12 04 12T01020								☆						☆		☆			SPG433T0320
	SPUN120304FP	12	1/2	4.6	.181							☆								SPU421FP
						K10	K10	K01	K01	K05	K05	N05	S10	S15	S05	S15	H05	H10	H05	

	ISO	□	iC	l_a mm	l_a inch	H			ANSI
						CB	CB	CB	
						7015	7025	7035	
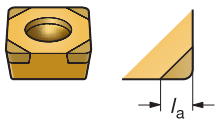	SCGW09T304S01030F	09	3/8	1.8	.071	☆	☆		SCGW3(2.5)1S0330F
	SCGW09T308S01030F			2.1	.083	☆	☆		SCGW3(2.5)2S0330F
	SCGW09T304S01530F	09	3/8	1.8	.071			☆	SCGW3(2.5)1S0530F
	SCGW09T308S01530F			2.1	.083			☆	SCGW3(2.5)2S0530F
						H15	H25	H30	

Positive basic shape inserts

Positive basic shape inserts – CoroTurn® 107

Triangular

TCGW, TCMW

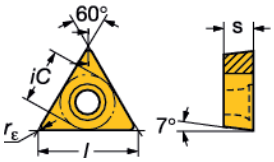

For ISO application areas, see bottom of the table.

Note! Grade CB7025 is uncoated.

	ISO		iC	l_a mm	l_a inch	K CB 7525	N CD 1810	N CD CD10	H CB 7015	H CB 7025	H CB 7035	H CB 7525	H CB CB20	ANSI
	TCGW090202S01020F	09	7/32	3.2	.126				☆	☆				TCGW1.8(1.5)0S0320F
	TCGW090204S01020F			3.0	.118				☆	☆				TCGW1.8(1.5)1S0320F
	TCGW110204S01020F	11	1/4	3.0	.118				☆	☆				TCGW2(1.5)1S0320F
	TCGW110208S01020F			2.7	.106				☆	☆				TCGW2(1.5)2S0320F
	TCGW110304S01020F			3.0	.118				☆	☆				TCGW221S0320F
	TCGW110308S01020F			2.7	.106				☆	☆				TCGW222S0320F
	TCGW110202T01020F	11	1/4	2.8	.110	☆								TCGW2(1.5)0T0320F
	TCGW110204T01020F			2.8	.110	☆								TCGW2(2.5)1T0320F
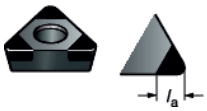	TCGW090204S01530F	09	7/32	1.8	.071						☆			TCGW1.8(1.5)1S0530F
	TCGW090204S01530F			2.8	.110							☆		TCGW1.8(1.5)1S0530F
	TCGW090208S01520F			2.0	.079						☆			TCGW1.8(1.5)2S0520F
	TCGW090208S01530F			2.0	.079						☆			TCGW1.8(1.5)2S0530F
	TCGW110304S01530F	11	1/4	1.8	.071						☆			TCGW221S0530F
	TCGW110308S01530F			2.0	.079						☆			TCGW222S0530F
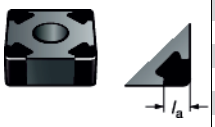	TCGW090204S01520F	09	7/32	1.8	.071						☆			TCGW1.8(1.5)1S0520F
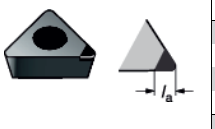	TCMW090204S01020E	09	7/32	3.0	.118								☆	TCMW1.8(1.5)1S0320E
	TCMW 110304S01020E	11	1/4	3.0	.118								☆	TCMW221S0320E
	TCMW 110308S01020E			3.0	.118								☆	TCMW222S0320E
	TCMW110204S01020E			3.0	.118								☆	TCMW2(1.5)1 S0320E
	TCMW110208S01020E			3.0	.118								☆	TCMW2(1.5)2S0320E
	TCMW090204FP	09	7/32	2.7	.106			☆						TCMW1.8(1.5)1FP
	TCMW 110304FP	11	1/4	2.7	.106			☆						TCMW221FP
	TCMW 110308FP			2.4	.094			☆						TCMW222FP
	TCMW110204FP			2.7	.106			☆						TCMW2(1.5)1FP
	TCMW110208FP			2.4	.094			☆						TCMW2(1.5)2FP
	TCMW16T304FP	16	3/8	4.2	.165			☆						TCMW3(2.5)1FP
	TCMW16T308FP			3.9	.154			☆						TCMW3(2.5)2FP
						K05	N10	N05	H15	H25	H30	H30	H01	

★= First choice

SANDVIK Coromant

Positive basic shape inserts

Positive basic shape inserts – CoroTurn® 111

Triangular

TPGW

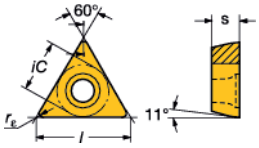

For ISO application areas, see bottom of the table.

Note! Grade CB7025 is uncoated.

	ISO		iC	l_a mm	l_a inch	H CB 7015	H CB 7025	H CB 7035	ANSI
	TPGW110304S01020F	11	1/4	3.0	.118	☆	☆		TPGW221S0320F
	TPGW110308S01020F			2.7	.106	☆	☆		TPGW222S0320F
	TPGW110304S01530F	11	1/4	1.8	.071			☆	TPGW221S0530F
	TPGW110308S01530F			2.0	.079			☆	TPGW222S0530F
						H15	H25	H30	

★= First choice

Positive basic shape inserts – T-Max®

Triangular

TPUN/TPU TPGN/TPG

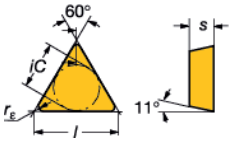

For ISO application areas, see bottom of the page.

	ISO		iC	l_a mm	l_a inch	K CC 650	K CB 7925	K CB CB50	N CD CD10	S CC 650	S CC 670	H CC 650	H CC 670	H CB CB50	ANSI
	TPGN 11 03 04T01020	11	1/4			☆				☆		☆			TPG221T0320
	TPGN 11 03 08T01020					☆				☆	☆	☆	☆		TPG222T0320
						K01	K05	K05	N05	S05	S15	H05	H10	H05	

★= First choice

Grades for general turning

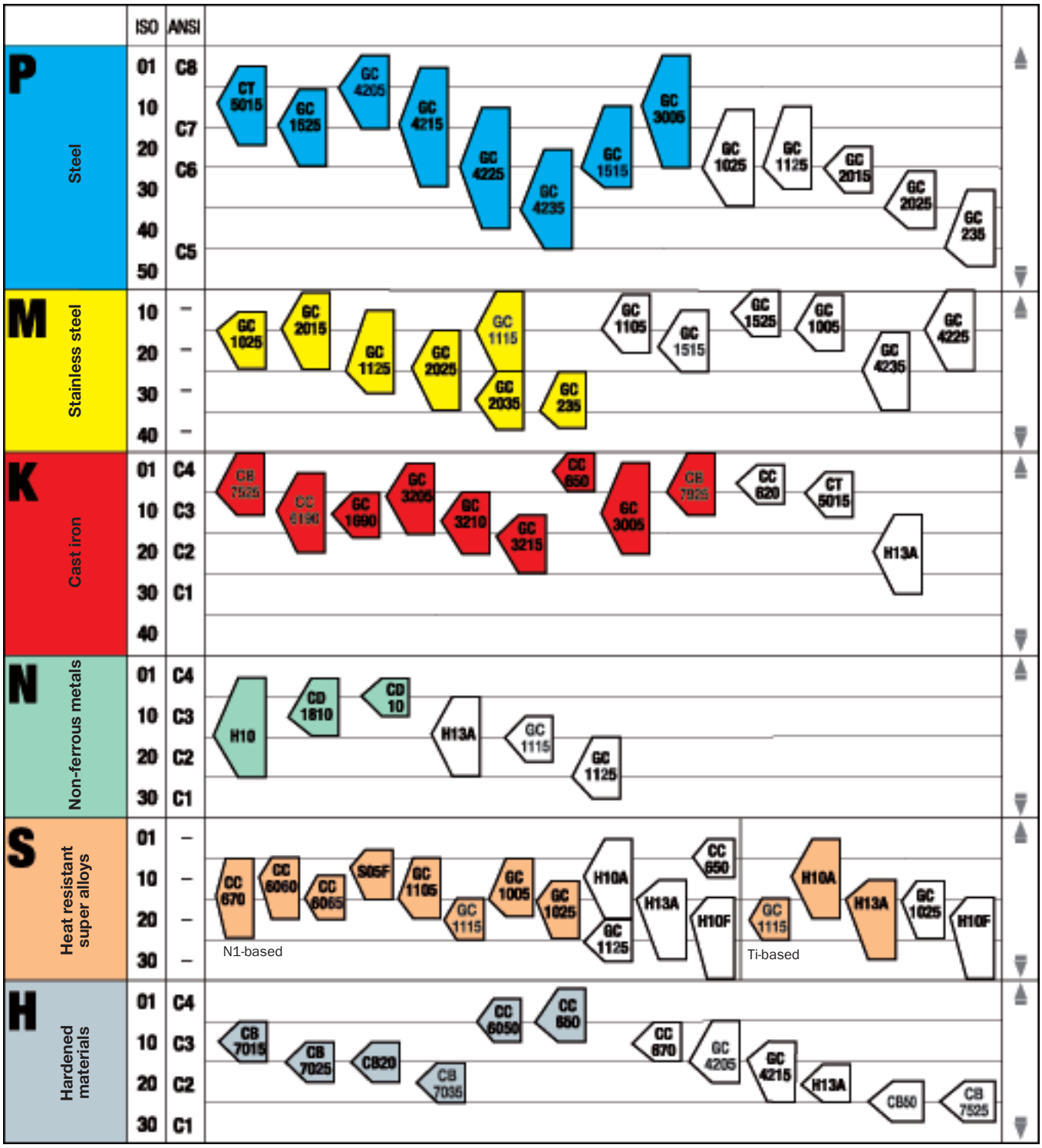

The position and form of the grade symbols indicate the suitable field of application.

Center of the field of application.

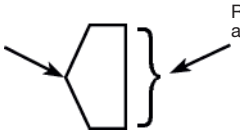

Recommended field of application.

Wear resistance

Toughness

= Basic grades

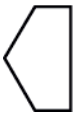

= Complementary grades

SANDVIK Coromant

Cutting data and chip control

Chip evacuation and process stability are important factors that affect the selection of cutting data for boring applications.

Cutting speed recommendations for chosen grades (see next page) can be followed generally, but it is not recommended to use starting values higher than those given below, in order to take the boring tool application into consideration.

Maximum recommended starting value for cutting speed is 200 m/min (656 ft/min) for rough boring and 240 m/min (787 ft/min) for fine boring, to ensure proper chip evacuation and to secure a stable process.

The recommended starting value for cutting speed for fine boring head 391.37A with steel or carbide bars with inserts is 90-120 m/min (295 - 394 ft/min); use lower values for long steel bars. Recommended starting value for ground carbide bars is 60 m/min (197 ft/min).

Recommended depth of cut and feed for the chosen insert (see turning catalog or insert box) can generally be followed, but with the following exceptions:

- Maximum recommended depth of cut for fine boring is 0.5 mm (0.020 inch)
- Cutting speed must be reduced when working with long overhangs.
  Silent Tools can be used to achieve higher cutting speeds at certain overhangs.
- If the tool is adjusted to the minimum possible diameter, chip evacuation will be more critical and a reduction of cutting depth might be necessary.
- Maximum feed in fine boring is limited by desired surface finish. The possibility to influence chip form is therefore limited. By using a wiper insert, the surface finish can be retained at higher feeds. However, the wiper inserts exert more radial pressure, increasing the risk for an unstable process.

Cutting speed recommendations, metric values

The recommendations are valid for use with cutting fluid.

ISO P		Steel	Specific cutting force k_c 0.4	Hardness Brinell	<<<< WEAR RESISTANCE			
					CT5005	CT5015	GC1525	GC1515
					h_{ex}, mm ≈ feed f_n, mm/r			
					0.05-0.1-0.2	0.05-0.1-0.2	0.05-0.1-0.2	0.1-0.2-0.3
MC No.	CMC No.	Material	N/mm²	HB	Cutting speed (V_c), m/min			
		Unalloyed steel						
P1.1.Z.AN	01.1	C = 0.1–0.25%	2000	125	730-590-485	650-540-440	560-465-380	310-290-255
P1.2.Z.AN	01.2	C = 0.25–0.55%	2100	150	650-530-420	570-480-385	495-415-335	280-255-245
P1.3.Z.AN	01.3	C = 0.55–0.80%	2200	170	-	510-425-340	430-365-295	285-260-230
		Low-alloy steel						
		(alloying elements ≤5%)						
P2.1.Z.AN	02.1	Non-hardened	2150	180	530-450-360	480-400-320	375-320-255	295-200-125
P2.1.Z.AN	02.12	Ball bearing steel	2300	210	-	-	-	-
P2.5.Z.HT	02.2	Hardened and tempered	2550	275	395-325-250	285-235-190	200-165-135	195-100-40
P2.5.Z.HT	02.2	Hardened and tempered	2850	350	320-260-200	230-190-150	160-135-110	160-80-34
		High-alloy steel						
		(alloying elements >5%)						
P3.0.Z.AN	03.11	Annealed	2500	200	-	395-330-250	260-215-175	-
P3.0.Z.HT	03.21	Hardened tool steel	3900	325	-	195-165-130	145-115-90	-
		Steel castings						
P1.5.C.UT	06.1	Unalloyed	2000	180	-	260-215-175	225-185-145	-
P2.6.C.UT	06.2	Low-alloy (alloying elements ≤5%)	2100	200	-	270-225-170	175-145-105	-
P3.0.C.UT	06.3	High-alloy (alloying elements >5%)	2650	225	-	200-165-125	140-115-85	-

ISO M		Stainless steel	Specific cutting force k_c 0.4	Hardness Brinell	<<<< WEAR RESISTANCE			
					GC1525	GC1005	GC1105	GC1115
					h_{ex}, mm ≈ feed f_n, mm/r			
					0.1-0.2	0.1-0.2-0.3	0.1-0.2-0.3	0.1-0.2-0.3
MC No.	CMC No.	Material	N/mm²	HB	Cutting speed (V_c), m/min			
		Ferritic/martensitic						
		Bars/forged						
P5.0.Z.AN	05.11	Non-hardened	2300	200	290-240	380-305-245	380-305-245	335-255-200
P5.0.Z.PH	05.12	PH-hardened	3550	330	170-150	350-280-225	350-280-225	185-150-120
P5.0.Z.HT	05.13	Hardened	2850	330	170-150	245-195-160	245-195-160	200-160-140
		Austenitic						
		Bars/forged						
M1.0.Z.AQ	05.21	Austenitic	2300	180	220-195	410-330-265	410-330-265	265-215-165
M1.0.Z.PH	05.22	PH-hardened	3550	330	195-170	220-175-145	220-175-145	185-150-120
M2.0.Z.AQ	05.23	Super austenitic	2950	200	145-130	245-200-160	245-200-160	220-190-155
		Austenitic-ferritic (Duplex)						
		Bars/forged						
M3.1.Z.AQ	05.51	Non-weldable ≥ 0.05%C	2550	230	-	315-255-205	315-255-205	250-205-155
M3.2.Z.AQ	05.52	Weldable < 0.05%C	3050	260	-	280-225-185	280-225-185	230-170-130
		Ferritic/martensitic						
		Cast						
P5.0.C.UT	15.11	Non-hardened	2100	200	-	-	320-265-205	320-265-205
	15.12	PH-hardened	3150	330	-	-	160-130-95	160-130-95
P5.0.C.HT	15.13	Hardened	2650	330	-	-	175-145-110	175-145-110
		Austenitic						
		Cast						
M1.0.C.UT	15.21	Austenitic	2200	180	-	-	280-225-170	280-225-170
	15.22	PH-hardened	3150	330	-	-	160-130-95	160-130-95
M2.0.C.AQ	15.23	Super austenitic	2700	200	-	-	210-180-150	210-180-150
		Austenitic-ferritic (Duplex)						
		Cast						
M3.1.C.AQ	15.51	Non-weldable ≥ 0.05%C	2250	230	-	-	230-170-120	230-170-120
M3.2.C.AQ	15.52	Weldable < 0.05%C	2750	260	-	-	205-155-110	205-155-110

ISO K			Specific cutting force k_c 0.4	Hardness Brinell	<<<< WEAR RESISTANCE			
					CB7525/CB50	CB7925	CC620	CC650
					h_{ex}, mm ≈ feed f_n, mm/r			
					0.1-0.25-0.4	0.1-0.25-0.4	0.1-0.25-0.4	0.1-0.25-0.4
MC No.	CMC No.	Material	N/mm²	HB	Cutting speed (V_c), m/min			
		Malleable cast iron						
	07.1	Ferritic (short chipping)	940	130	-	-	800-700-600	800-700-600
K1.1.C.NS	07.2	Pearlitic (long chipping)	1100	230	-	-	700-590-500	700-600-500
		Gray cast iron						
K2.1.C.UT	08.1	Low tensile strength	1100	180	1700-1450-1200	1450-1200-1050	800-700-600	800-700-600
K2.2.C.UT	08.2	High tensile strength	1150	220	1450-1250-1050	1250-1050-890	760-650-540	760-650-540
		Nodular SG iron						
K3.1.C.UT	09.1	Ferritic	1050	160	-	-	-	610-550-450
K3.3.C.UT	09.2	Pearlitic	1750	250	-	-	-	510-450-350
K3.4.C.UT	09.3	Martensitic	2700	380	-	-	-	350-305-260

SANDVIK Coromant

Cutting speed recommendations, metric values

TOUGHNESS >>>>										
GC1025	GC1125	GC3005	GC4205	GC4215	GC4225	GC2015	GC4235	GC2025	GC235	
0.1-0.2-0.3	0.1-0.2-0.3	0.1-0.3-0.5	0.1-0.4-0.8	0.1-0.4-0.8	0.1-0.4-0.8	0.1-0.4-0.8	0.1-0.4-0.8	0.1-0.4-0.8	0.1-0.4-0.8	
310-290-255 280-255-225 260-235-210	310-290-255 280-255-225 260-235-210	520-415-340 470-370-305 445-355-290	620-450-330 560-405-295 530-385-275	570-405-300 510-365-265 460-330-240	510-345-245 455-305-215 425-290-205	440-300-210 400-270-190 370-250-175	425-275-200 380-245-180 365-235-170	295-200-145 265-180-130 250-170-120	185-135-95 165-120-85 155-115-80	
- - - -	- - - -	500-375-300 - 275-215-175 225-170-140	610-410-285 530-350-250 330-230-175 265-185-140	560-370-260 460-305-215 300-210-155 240-170-125	460-305-215 395-265-190 255-180-140 205-145-110	395-265-190 350-230-160 260-180-140 210-145-115	300-185-135 250-155-110 185-120-85 150-95-70	220-145-100 195-125-85 145-95-65 115-75-50	155-110-70 - 110-70-50 85-55-39	
- -	- -	370-275-225 180-130-105	445-295-215 220-140-105	405-270-200 200-130-95	300-205-150 135-95-75	260-180-130 115-85-65	240-155-105 110-70-50	185-125-85 85-55-38	145-100-65 65-45-30	
- - -	- - -	275-220-185 270-200-170 205-155-130	335-235-185 290-205-155 225-150-115	300-215-170 260-185-140 205-135-105	240-180-130 210-140-100 185-125-90	210-155-110 180-120-85 160-110-75	185-140-100 165-100-70 145-95-65	140-105-80 125-80-55 110-75-50	100-80-60 95-65-45 80-60-39	

TOUGHNESS >>>>									
GC1515	GC1025	GC1125	GC4225	GC2015	GC4235	GC2025	GC2035	GC235	
0.1-0.2-0.3	0.1-0.2-0.3	0.1-0.2-0.3	0.2-0.4-0.6	0.2-0.4-0.6	0.2-0.4-0.6	0.2-0.4-0.6	0.2-0.4-0.6	0.2-0.4-0.6	
305-235-185 170-135-110 180-150-130	280-215-170 155-125-100 165-135-120	280-215-170 155-125-100 165-135-120	280-235-210 130-105-80 160-130-95	260-220-200 125-100-80 145-120-85	235-200-180 90-65-55 105-75-50	230-175-135 110-70-50 120-80-55	180-160-130 85-65-45 95-70-50	130-110-90 70-55-45 75-60-50	
245-195-150 170-135-110 205-175-145	220-180-135 155-125-100 185-160-130	220-180-135 155-125-100 185-160-130	295-235-200 130-100-85 180-160-115	290-240-190 130-100-80 160-135-100	205-160-125 100-75-60 140-110-85	240-175-130 100-70-55 130-100-75	170-145-115 85-65-45 100-90-70	115-100-85 70-55-45 85-70-60	
230-185-145 210-155-120	210-170-130 190-140-110	210-170-130 190-140-110	250-215-170 210-175-135	220-185-145 190-150-120	190-145-115 135-120-110	190-150-110 150-120-90	160-135-105 130-110-85	105-95-80 95-80-70	
290-240-185 150-120-90 160-130-100	265-220-170 135-110-80 145-120-90	265-220-170 135-110-80 145-120-90	270-225-185 110-80-65 120-100-70	250-210-170 100-70-55 110-90-60	205-170-155 75-55-45 90-65-50	220-160-120 85-55-40 120-80-55	170-145-115 70-50-40 75-60-50	115-100-85 60-45-35 65-50-40	
255-205-160 150-120-90 195-165-135	230-185-145 135-110-80 175-150-125	230-185-145 135-110-80 175-150-125	220-180-150 110-80-65 170-130-110	220-180-140 105-80-60 145-115-95	165-125-100 75-55-45 120-90-75	200-155-115 85-55-40 130-90-65	150-120-95 70-50-40 100-80-60	100-90-75 65-45-33 80-65-55	
210-155-110 185-145-100	190-140-100 170-130-90	190-140-100 170-130-90	215-175-150 185-165-120	185-150-135 160-140-105	170-130-105 120-105-100	150-120-90 125-105-80	130-110-85 105-95-75	95-80-70 90-75-65	

TOUGHNESS >>>>										
CC6190	CC1690	CT5015	GC3205	GC3210	GC3215	GC3005	H13A			
0.2-0.4-0.6	0.2-0.4-0.6	0.1-0.2-0.3	0.2-0.4-0.6	0.2-0.4-0.6	0.2-0.4-0.6	0.2-0.4-0.6	0.1-0.3-0.5			
810-660-550 700-550-440	740-600-500 640-500-400	200-165-135 140-115-95	460-380-325 375-310-265	385-315-265 315-255-215	260-215-185 210-175-150	250-210-185 235-190-150	140-125-110 125-110-90			
890-720-600 790-620-500	740-600-500 690-540-435	320-260-220 280-235-205	530-435-375 425-350-300	445-360-305 355-290-245	300-250-210 240-200-170	275-245-225 260-225-200	180-145-110 140-115-95			
- - -	580-450-345 480-350-250 325-260-220	255-200-160 230-195-170 115-95-85	390-330-275 350-300-250 265-225-190	360-305-250 325-275-225 245-210-170	240-195-165 215-175-150 165-135-115	265-215-180 240-195-160 185-140-110	135-125-95 125-115-90 100-85-65			

Cutting speed recommendations, metric values

The recommendations are valid for use with cutting fluid.

ISO N		Non-ferrous metals	Specific cutting force k_c 0.4	Hardness Brinell	<<<< WEAR RESISTANCE		
					CD10	CD1810	H10
					h_{ex}, mm ≈ feed f_n, mm/r		
					0.05-0.4	0.15-0.8	0.15-0.8
MC No.	CMC No.	Material	N/mm²	HB	Cutting speed (V_c), m/min		
		Aluminum alloys					
N1.2.Z.UT	30.11	Wrought or wrought and coldworked, non-aging	500	60	2 000 (2500-250)[1]	2 000 (2500-250)[1]	2 000 (2500-250)[1]
N1.2.Z.AG	30.12	Wrought or wrought and aged	800	100	2 000 (2500-250)[1]	2 000 (2500-250)[1]	2 000 (2500-250)[1]
		Aluminum alloys					
N1.3.C.UT	30.21	Cast, non-aging	750	75	2 000 (2500-250)[1]	2 000 (2500-250)[1]	2 000 (2500-250)[1]
N1.3.C.AG	30.22	Cast or cast and aged	900	90	2 000 (2500-250)[1]	2 000 (2500-250)[1]	2 000 (2500-250)[1]
		Aluminum alloys					
	30.41	Cast, 13–15% Si	950	130	1 550 (1950-195)[1]	770 (960-95)[1]	450 (560-55)[1]
N1.4.C.NS	30.42	Cast, 16–22% Si	950	130	770 (960-95)[1]	510 (640-65)[1]	300 (375-38)[1]
		Copper and copper alloys					
N3.3.U.UT	33.1	Free cutting alloys, ≥1% Pb	700	110	500 (630-65)[1]	500 (630-65)[1]	500 (630-65)[1]
N3.2.C.UT	33.2	Brass, leaded bronzes, ≤1% Pb	700	90	500 (630-65)[1]	500 (630-65)[1]	500 (630-65)[1]
N3.1.U.UT	33.3	Bronze and non-leaded copper incl. electrolytic copper	1750	100	300 (375-38)[1]	300 (375-38)[1]	300 (375-38)[1]

ISO S		Heat resistant material	Specific cutting force k_c 0.4	Hardness Brinell	<<<< WEAR RESISTANCE		
					CC650	CC6060	CC6065
					h_{ex}, mm ≈ feed f_n, mm/r		
					0.1 - 0.2	0.1-0.2-0.3	0.1-0.2-0.3
MC No.	CMC No.	Material	N/mm²	HB	Cutting speed (V_c), m/min		
		Heat resistant super alloys					
		Iron base					
S1.0.U.AN	20.11	Annealed or solution treated	3000	200	-	-	-
S1.0.U.AG	20.12	Aged or solution treated and aged	3050	280	-	-	-
		Nickel base					
S2.0.Z.AN	20.21	Annealed or solution treated	3300	250	400-320	400-325-270	330-255-200
S2.0.Z.AG	20.22	Aged or solution treated and aged	3600	350	340-265	300-235-190	240-175-130
S2.0.C.NS	20.24	Cast or cast and aged	3700	320	220-160	240-205-175	215-180-150
		Cobalt base					
S3.0.Z.AN	20.31	Annealed or solution treated	3300	200	345-260	-	-
S3.0.Z.AG	20.32	Solution treated and aged	3700	300	300-225	-	-
S3.0.C.NS	20.33	Cast or cast and aged	3800	320	285-225	-	-
					H10	GC1105	H10A
		Titanium alloys[2]		Rm[3]	0.1-0.2-0.3	0.1-0.2-0.3	0.1-0.3-0.5
S4.1.Z.UT	23.1	Commercial pure (99.5% Ti)	1550	400	205-170-145	205-170-145	195-160-135
S4.2.Z.AN	23.21	α, near α and α + β alloys, annealed	1700	950	85-70-55	85-70-55	80-65-55
S4.3.Z.AG	23.22	α + β alloys in aged conditions, β alloys, annealed or aged	1700	1050	80-60-50	80-60-50	80-60-50

ISO H		Hardened material	Specific cutting force k_c 0.4	Hardness Brinell	<<<< WEAR RESISTANCE		
					CB7015	CB7025	CB20
					h_{ex}, mm ≈ feed f_n, mm/r		
					0.05-0.15-0.25	0.05-0.15-0.25	0.05-0.15-0.25
MC No.	CMC No.	Material	N/mm²	HB	Cutting speed (V_c), m/min		
		Hard steel					
H1.1.Z.HA	04.1	Hardened and tempered	3250	*45HRC*	-	-	-
H1.1.Z.HA	04.1		3950	*50HRC*	350-265-225	250-210-185	260-230-205
H1.2.Z.HA	04.1		4700	*55HRC*	295-225-185	210-175-155	215-195-170
		Extra hard steel					
H1.3.Z.HA	04.1	Hardened and tempered	5550	*60HRC*	250-190-160	180-150-135	185-165-145
H1.4.Z.HA	04.1		6450	*65HRC*	215-165-135	155-130-115	160-140-125
		Chilled cast iron					
H2.0.C.UT	10.1	Cast or cast and aged	2800	400	-	-	-

1) The cutting speeds shown in the table are valid for all feeds within the feed range.
2) 30–45° lead angle, positive cutting geometry and coolant should be used.
3) Rm = ultimate tensile strength measured in MPa.

SANDVIK Coromant

Cutting speed recommendations, metric values

TOUGHNESS >>>>						
H13A	GC1115	GC1025	GC1125			
0.15-0.8	0.15-0.8	0.15-0.8	0.15-0.8			
1 900 (2400-240)[1)] 1 900 (2400-240)[1)]	810 (1000-100)[1)] 315 (395-39)[1)]	770 (960-95)[1)] 300 (375-38)[1)]	770 (960-95)[1)] 300 (375-38)[1)]			
1 900 (2400-240)[1)] 1 900 (2400-240)[1)]	810 (1000-100)[1)] 540 (680-70)[1)]	770 (960-95)[1)] 510 (640-65)[1)]	770 (960-95)[1)] 510 (640-65)[1)]			
400 (500-50)[1)] 250 (315-31)[1)]	315 (395-39)[1)] 220 (275-28)[1)]	300 (375-38)[1)] 210 (265-26)[1)]	300 (375-38)[1)] 210 (265-26)[1)]			
450 (560-55)[1)] 450 (560-55)[1)] 270 (340-34)[1)]	210 (265-26)[1)] 125 (155-16)[1)] 90 (115-11)[1)]	200 (250-25)[1)] 120 (150-15)[1)] 85 (105-11)[1)]	200 (250-25)[1)] 120 (150-15)[1)] 85 (105-11)[1)]			

TOUGHNESS >>>>									
CC670	S05F	GC1105	GC1115	GC1005	H10A	H13A	GC1025	GC1125	H10F
0.1-0.2-0.3	0.1-0.2-0.3	0.1-0.3-0.5	0.1-0.3-0.5	0.1-0.3-0.5	0.1-0.3-0.5	0.1-0.3-0.5	0.1-0.3-0.5	0.1-0.2-0.5	0.1-0.3-0.5
- -	160-135-110 125-105-85	150-100-70 120-80-60	120-80-55 95-65-50	150-100-70 120-80-60	85-70-55 65-55-40	80-65-50 60-50-40	75-60-45 55-45-35	75-60-45 55-45-35	70-55-40 50-40-30
385-315-270 325-270-230 295-245-210	100-85-70 90-75-60 80-65-55	90-55-30 80-50-27 70-45-24	70-45-24 65-40-22 60-37-19	90-55-30 80-50-27 70-45-24	55-40-32 40-32-21 26-21-16	50-40-30 40-30-20 25-20-15	45-35-25 35-25-15 23-17-12	45-35-25 35-25-15 23-17-12	40-30-20 30-20-10 20-15-10
345-255-205 300-225-175 285-225-170	100-85-70 90-75-60 80-65-55	90-60-30 80-50-27 70-45-24	70-45-24 65-40-21 60-37-19	90-60-30 80-50-27 70-45-24	55-40-32 40-32-21 26-21-16	50-40-30 40-30-20 25-20-15	45-35-25 35-25-15 23-17-12	45-35-25 35-25-15 23-17-12	40-30-20 30-20-10 20-15-10
H13A	H10F	GC1115	GC1025						
0.1-0.3-0.5	0.1-0.3-0.5	0.1-0.3-0.5	0.1-0.3-0.5						
180-150-125 75-60-50 70-55-45	160-135-115 65-55-45 65-50-40	185-155-130 80-65-50 75-55-45	160-135-115 65-55-45 65-50-40						

TOUGHNESS >>>>									
CB7525/CB50	CB7925	CC6050	CC650	CC670	GC4205	GC4215	H13A		
0.1-0.25-0.4	0.1-0.25-0.4	0.05-0.15-0.25	0.1-0.25-0.4	0.1-0.25-0.4	0.1-0.3-0.6	0.1-0.3-0.6	0.1-0.3-0.6		
- 205-165-135 175-140-110	- - -	290-235-175 240-195-145 200-165-120	205-155-100 170-125-85 140-105-70	205-170-135 165-140-110 140-115-95	70-45-29 - -	65-40-26 - -	45-25-16 - -		
145-120-95 125-100-80	- -	170-140-105 145-120-90	120-90-60 105-80-50	120-100-80 105-85-70	- -	- -	- -		
180-150-120	180-150-120	-	120-90-60	120-90-60	50-29-17	45-26-15	35-20-11		

Cutting speed recommendations, inch values

The recommendations are valid for use with cutting fluid.

ISO P		Steel	Specific cutting force k_c .016	Hardness Brinell	<<<< WEAR RESISTANCE				
					CT5005	CT5015	GC1525	GC1515	GC1025
					h_{ex}, inch ≈ feed f_n, inch/rev. at 0° to -5° lead angle				
					.002-.004-.008	.002-.004-.008	.002-.004-.008	.004-.008-.012	.004-.008-.012
MC No.	CMC No.	Material	lbs/in²	HB	Cutting speed v_c, ft/min				
		Unalloyed steel							
P1.1.Z.AN	01.1	C = 0.1–0.25%	288,500	125	2400-1950-1600	2150-1800-1450	1850-1500-1250	1000-950-830	1000-950-830
P1.2.Z.AN	01.2	C = 0.25–0.55%	306,000	150	2150-1750-1350	1900-1550-1250	1600-1350-1100	1000-910-810	920-830-730
P1.3.Z.AN	01.3	C = 0.55–0.80%	317,000	170	-	1650-1400-1100	1400-1200-960	940-850-750	850-770-690
		Low-alloy steel							
		(alloying elements ≤5%)							
P2.1.Z.AN	02.1	Non-hardened	308,000	180	1750-1450-1150	1550-1300-1050	1250-1050-830	960-650-405	-
P2.1.Z.AN	02.12	Ball bearing steel	336,500	210	-	-	-	-	-
P2.5.Z.HT	02.2	Hardened and tempered	371,500	275	1300-1050-810	920-770-610	650-540-435	640-320-130	-
P2.5.Z.HT	02.2	Hardened and tempered	413,500	350	1050-850-650	740-620-495	520-435-350	520-255-105	-
		High-alloy steel							
		(alloying elements >5%)							
P3.0.Z.AN	03.11	Annealed	361,500	200	-	1300-1050-820	840-710-570	-	-
P3.0.Z.HT	03.21	Hardened tool steel	563,500	325	-	640-530-420	465-370-290	-	-
		Steel castings							
P1.5.C.UT	06.1	Unalloyed	289,000	180	-	850-700-570	740-600-470	-	-
P2.6.C.UT	06.2	Low-alloy (alloying elements ≤5%)	302,500	200	-	880-730-550	580-470-345	-	-
P3.0.C.UT	06.3	High-alloy (alloying elements >5%)	385,000	225	-	660-550-410	460-365-280	-	-

ISO M		Stainless steel	Specific cutting force k_c .016	Hardness Brinell	<<<< WEAR RESISTANCE				
					GC1525	GC1005	GC1105	GC1115	GC1515
					h_{ex}, inch ≈ feed f_n, inch/rev. at 0° to -5° lead angle				
					.004-.008	.004-.008-.012	.004-.008-.012	.004-.008-.012	.004-.008-.012
MC No.	CMC No.	Material	lbs/in²	HB	Cutting speed v_c, ft/min				
		Ferritic/martensitic							
		Bars/forged							
P5.0.Z.AN	05.11	Non-hardened	334,500	200	950-790	1250-990-800	1250-990-800	1100-840-650	1000-770-600
P5.0.Z.PH	05.12	PH-hardened	514,500	330	560-490	1150-910-740	1150-910-740	610-490-390	560-445-355
P5.0.Z.HT	05.13	Hardened	414,000	330	560-490	790-630-510	790-630-510	650-530-460	590-485-425
		Austenitic							
		Bars/forged							
M1.0.Z.AQ	05.21	Austenitic	337,000	180	720-640	1350-1050-870	1350-1050-870	870-700-530	800-640-490
M1.0.Z.PH	05.22	PH-hardened	517,500	330	630-560	720-580-470	720-580-470	610-490-390	560-445-355
M2.0.Z.AQ	05.23	Super austenitic	428,000	200	485-430	810-640-520	810-640-520	730-630-510	670-570-465
		Austenitic-ferritic (Duplex)							
		Bars/forged							
M3.1.Z.AQ	05.51	Non-weldable ≥ 0.05%C	372,500	230	-	1050-820-670	1050-820-670	830-660-510	760-610-465
M3.2.Z.AQ	05.52	Weldable < 0.05%C	445,500	260	-	920-740-600	920-740-600	740-550-430	680-500-390
		Ferritic/martensitic							
		Cast							
P5.0.C.UT	15.11	Non-hardened	304,500	200	-	-	-	1050-860-660	960-790-610
	15.12	PH-hardened	453,500	330	-	-	-	530-430-310	490-395-285
P5.0.C.HT	15.13	Hardened	385,000	330	-	-	-	570-470-350	520-430-320
		Austenitic							
		Cast							
M1.0.C.UT	15.21	Austenitic	316,500	180	-	-	-	910-730-560	830-670-510
	15.22	PH-hardened	456,000	330	-	-	-	530-430-310	485-395-285
M2.0.C.AQ	15.23	Super austenitic	390,000	200	-	-	-	690-590-490	630-540-445
		Austenitic-ferritic (Duplex)							
		Cast							
M3.1.C.AQ	15.51	Non-weldable ≥ 0.05%C	329,500	230	-	-	-	750-550-390	680-500-355
M3.2.C.AQ	15.52	Weldable < 0.05%C	401,000	260	-	-	-	670-510-350	610-465-320

ISO K		Cast iron	Specific cutting force k_c .016	Hardness Brinell	<<<< WEAR RESISTANCE				
					CB50/CB7525	CB7925	CC620	CC650	CC6190
					h_{ex}, inch ≈ feed f_n, inch/rev. at 0° to -5° lead angle				
					.004-.010-.016	.004-.010-.016	.004-.010-.016	.004-.010-.016	.008-.016-.024
MC No.	CMC No.	Material	lbs/in²	HB	Cutting speed v_c, ft/min				
		Malleable cast iron							
	07.1	Ferritic (short chipping)	136,500	130	-	-	2600-2300-1950	2600-2300-1950	2650-2150-1800
K1.1.C.NS	07.2	Pearlitic (long chipping)	160,000	230	-	-	2300-1950-1650	2300-1950-1600	2300-1800-1450
		Gray cast iron							
K2.1.C.UT	08.1	Low tensile strength	158,500	180	5600-4650-3950	4750-3950-3400	2650-2300-1950	2650-2300-1950	2900-2350-1950
K2.2.C.UT	08.2	High tensile strength	164,500	220	4800-4000-3450	4100-3400-2900	2500-2100-1750	2500-2100-1750	2600-2000-1650
		Nodular SG iron							
K3.1.C.UT	09.1	Ferritic	152,000	160	-	-	-	2000-1800-1450	-
K3.3.C.UT	09.2	Pearlitic	252,000	250	-	-	-	1650-1450-1150	-
K3.4.C.UT	09.3	Martensitic	390,500	380	-	-	-	1150-1000-860	-

SANDVIK Coromant

Cutting speed recommendations, inch values

TOUGHNESS >>>>								
GC1125	GC3005	GC4205	GC4215	GC4225	GC2015	GC4235	GC2025	GC235
.004-.008-.012	.004-.012-.020	.004-.016-.031	.004-.016-.031	.004-.016-.031	.004-.016-.031	.004-.016-.031	.004-.016-.031	.004-.016-.031
1000-950-830 920-830-730 850-770-690	1700-1350-1100 1550-1200-1000 1450-1150-950	2050-1450-1100 1850-1300-970 1750-1250-920	1850-1350-990 1650-1200-880 1500-1100-790	1650-1150-810 1500-990-710 1400-940-680	1450-980-700 1300-880-630 1200-810-580	1400-890-660 1250-800-590 1200-760-560	970-650-480 870-590-430 820-550-395	600-435-315 540-390-285 510-370-270
- - - -	1650-1250-980 - 910-700-580 730-560-465	2000-1350-940 1750-1150-820 1050-750-570 870-610-460	1800-1200-860 1500-990-710 980-680-510 790-550-415	1500-1000-710 1300-870-620 830-590-455 670-475-365	1300-860-630 1150-750-530 850-590-460 690-475-375	980-600-445 820-500-365 600-385-280 485-310-225	720-470-330 640-405-280 475-310-215 380-250-175	510-350-235 - 355-230-160 285-185-130
- -	1200-900-740 590-425-350	1450-970-720 710-460-345	1350-880-650 650-415-315	980-670-500 445-310-240	850-590-430 375-275-215	780-500-345 360-225-165	610-405-280 280-180-125	475-325-210 215-155-100
- -	910-710-610 880-660-560	1100-770-610 950-670-510	990-700-550 860-610-470	790-580-430 690-460-330	690-510-365 590-390-280	600-450-335 540-320-235	460-345-265 410-260-180	335-255-190 305-220-155
-	670-500-420	730-490-380	660-450-345	600-410-295	520-360-250	470-305-220	360-245-165	270-190-130

TOUGHNESS >>>>								
GC1025	GC1125	GC4225	GC2015	GC4235	GC2025	GC2035	GC235	
.004-.008-.012	.004-.008-.012	.004-.016-.024	.008-.016-.024	.008-.016-.024	.008-.016-.024	.008-.016-.024	.008-.016-.024	
910-700-550 510-405-325 540-440-385	910-700-550 510-405-325 540-440-385	910-770-690 430-340-255 520-425-305	850-720-650 410-325-260 475-390-275	770-650-580 290-220-170 345-245-160	750-570-440 360-225-160 390-260-175	590-520-420 280-210-145 310-225-160	425-360-295 230-180-145 245-195-165	
730-580-445 510-405-325 610-520-420	730-580-445 510-405-325 610-520-420	960-770-650 430-330-275 590-510-375	950-780-620 425-325-260 520-440-325	670-520-400 330-245-195 455-350-270	790-570-425 330-235-175 425-325-245	560-470-375 280-210-145 330-295-225	375-325-275 230-180-145 280-230-195	
690-550-420 620-455-355	690-550-420 620-455-355	830-700-550 690-560-445	720-600-470 620-490-390	620-480-365 440-395-365	620-485-355 490-390-290	520-440-340 425-360-275	345-310-260 310-260-230	
870-720-550 445-360-260 475-390-290	870-720-550 445-360-260 475-390-290	880-740-600 360-255-205 395-325-220	820-680-550 325-225-180 360-290-195	680-560-510 250-180-145 300-210-160	720-520-390 275-180-130 390-260-175	560-470-375 230-165-130 240-190-160	375-325-275 195-145-115 215-165-130	
760-610-465 445-360-260 570-490-405	760-610-465 445-360-260 570-490-405	720-590-490 360-255-205 550-430-360	720-590-455 345-260-195 475-375-310	530-410-325 250-180-145 400-300-240	660-500-370 275-180-130 425-290-210	490-390-310 230-165-130 330-260-195	330-295-245 205-145-110 260-210-180	
620-455-325 560-420-290	620-455-325 560-420-290	700-570-495 600-530-390	600-490-440 530-455-340	560-425-335 395-340-325	490-390-290 410-340-260	425-360-275 345-310-245	310-260-230 295-245-210	

TOUGHNESS >>>>								
CC1690	CT5015	GC3205	GC3210	GC3215	GC3005	H13A		
.008-.016-.024	.004-.010-.012	.008-.016-.024	.008-.016-.024	.008-.016-.024	.008-.016-.024	.004-.010-.016		
2400-1950-1650 2100-1600-1300	650-530-445 455-370-310	1500-1250-1050 1250-1000-860	1250-1050-860 1050-830-700	850-700-600 690-570-490	820-690-600 770-620-485	460-410-360 410-360-295		
2400-1950-1650 2250-1750-1400	1050-850-710 910-770-670	1750-1400-1200 1400-1150-980	1450-1150-990 1150-950-800	980-820-680 790-650-550	900-810-740 850-730-650	590-470-355 460-375-310		
1900-1450-1100 1600-1150-820 1050-860-710	840-650-530 740-630-560 370-315-275	1300-1100-890 1150-980-810 870-730-620	1200-990-810 1050-900-730 800-680-550	780-640-540 700-570-490 540-440-375	860-690-590 780-630-520 600-455-355	445-470-310 410-375-290 330-275-210		

Cutting speed recommendations, inch values

The recommendations are valid for use with cutting fluid.

ISO N MC No.	CMC No.	Non-ferrous metals Material	Specific cutting force k_c .016 lbs/in²	Hardness Brinell HB	<<<< WEAR RESISTANCE CD10	CD1810	H10
					h_{ex}, inch ≈ feed f_n, inch/rev. at 0° to -5° lead angle		
					.002-.016	.006-.031	.006-.031
					Cutting speed v_c, ft/min		
		Aluminum alloys					
N1.2.Z.UT	30.11	Wrought or wrought and coldworked, non-aging	72,500	60	6550 (8200-820)[1]	6550 (8200-820)[1]	6550 (8200-820)[1]
N1.2.Z.AG	30.12	Wrought or wrought and aged	116,000	100	6550 (8200-820)[1]	6550 (8200-820)[1]	6550 (8200-820)[1]
		Aluminum alloys					
N1.3.C.UT	30.21	Cast, non-aging	109,000	75	6550 (8200-820)[1]	6550 (8200-820)[1]	6550 (8200-820)[1]
N1.3.C.AG	30.22	Cast or cast and aged	130,500	90	6550 (8200-820)[1]	6550 (8200-820)[1]	6550 (8200-820)[1]
		Aluminum alloys					
	30.41	Cast, 13–15% Si	138,000	130	5000 (6250-630)[1]	2500 (3150-315)[1]	1500 (1900-190)[1]
N1.4.C.NS	30.42	Cast, 16–22% Si	138,000	130	2500 (3150-315)[1]	1650 (2050-205)[1]	980 (1250-125)[1]
		Copper and copper alloys					
N3.3.U.UT	33.1	Free cutting alloys, ≥1% Pb	101,500	110	1650 (2050-205)[1]	1650 (2050-205)[1]	1650 (2050-205)[1]
N3.2.C.UT	33.2	Brass, leaded bronzes, ≤1% Pb	101,500	90	1650 (2050-205)[1]	1650 (2050-205)[1]	1650 (2050-205)[1]
N3.1.U.UT	33.3	Bronze and non-leaded copper incl. electrolytic copper	254,000	100	980 (1250-125)[1]	980 (1250-125)[1]	980 (1250-125)[1]

ISO S MC No.	CMC No.	Heat resistant material Material	Specific cutting force k_c .016 lbs/in²	Hardness Brinell HB	<<<< WEAR RESISTANCE CC650	CC6060	CC6065
					h_{ex}, inch ≈ feed f_n, inch/rev. at 0° to -5° lead angle		
					.004-.008	.004-.008-.012	.004-.008-.012
					Cutting speed v_c, ft/min		
		Heat resistant super alloys					
		Iron base					
S1.0.U.AN	20.11	Annealed or solution treated	435,000	200	-	-	-
S1.0.U.AG	20.12	Aged or solution treated and aged	445,500	280	-	-	-
		Nickel base					
S2.0.Z.AN	20.21	Annealed or solution treated	479,500	250	1300-1050	1300-1050-880	1100-830-650
S2.0.Z.AG	20.22	Aged or solution treated and aged	522,000	350	1100-860	980-770-620	790-570-420
S2.0.C.NS	20.24	Cast or cast and aged	538,500	320	720-520	790-660-570	700-580-485
		Cobalt base					
S3.0.Z.AN	20.31	Annealed or solution treated	478,500	200	1150-840	-	-
S3.0.Z.AG	20.32	Solution treated and aged	540,000	300	980-720	-	-
S3.0.C.NS	20.33	Cast or cast and aged	552,000	320	930-730	-	-
					H10	**GC1105**	**H10A**
		Titanium alloys[2]		**Rm**[3]	.004-.008-.012	.004-.008-.012	.004-.012-.020
S4.1.Z.UT	23.1	Commercial pure (99.5% Ti)	221,500	400	670-550-470	670-550-470	640-530-445
S4.2.Z.AN	23.21	α, near α and α + β alloys, annealed	243,000	950	280-230-180	280-230-180	265-215-175
S4.3.Z.AG	23.22	α + β alloys in aged conditions, β alloys, annealed or aged	245,000	1050	260-195-165	260-195-165	255-190-160

ISO H MC No.	CMC No.	Hardened material Material	Specific cutting force k_c .016 lbs/in²	Hardness	<<<< WEAR RESISTANCE CB7015	CB7025	CB20
					h_{ex}, inch ≈ feed f_n, inch/rev. at 0° to -5° lead angle		
					.002-.006-.010	.002-.006-.010	.002-.006-.010
					Cutting speed v_c, ft/min		
		Hard steel					
H1.1.Z.HA	04.1	Hardened and tempered	470,500	*45HRC*	-	-	-
H1.1.Z.HA	04.1		573,000	*50HRC*	1150-870-730	820-690-610	850-760-670
H1.2.Z.HA	04.1		684,000	*55HRC*	960-730-610	690-580-510	710-630-560
		Extra hard steel					
H1.3.Z.HA	04.1	Hardened and tempered	804,500	*60HRC*	820-620-520	590-490-435	610-540-480
H1.4.Z.HA	04.1		934,000	*65HRC*	710-530-450	510-425-375	520-465-410
		Chilled cast iron					
H2.0.C.UT	10.1	Cast or cast and aged	408,000	400 HB	-	-	-

1) The cutting speeds shown in the table are valid for all feeds within the feed range.
2) 30–45° lead angle, positive cutting geometry and coolant should be used.
3) Rm = ultimate tensile strength measured in MPa.

SANDVIK Coromant

Cutting speed recommendations, inch values

TOUGHNESS >>>>									
GC1115	GC1025	GC1125	H13A						
.006-.031	.006-.031	.006-.031	.006-.031						
2650 (3300-330)[1)] 1050 (1300-130)[1)]	2500 (3150-315)[1)] 980 (1250-125)[1)]	2500 (3150-315)[1)] 980 (1250-125)[1)]	6250 (7800-780)[1)] 6250 (7800-780)[1)]						
2650 (3300-330)[1)] 1750 (2200-220)[1)]	2500 (3150-315)[1)] 1650 (2050-205)[1)]	2500 (3150-315)[1)] 1650 (2050-205)[1)]	6250 (7800-780)[1)] 6250 (7800-780)[1)]						
1050 (1300-130)[1)] 720 (900-90)[1)]	980 (1250-125)[1)] 690 (860-85)[1)]	980 (1250-125)[1)] 690 (860-85)[1)]	1300 (1650-165)[1)] 820 (1050-105)[1)]						
690 (860-85)[1)] 410 (510-50)[1)] 290 (365-36)[1)]	650 (810-80)[1)] 390 (490-50)[1)] 275 (345-34)[1)]	650 (810-80)[1)] 390 (490-50)[1)] 275 (345-34)[1)]	1500 (1900-190)[1)] 1500 (1900-190)[1)] 890 (1100-110)[1)]						

TOUGHNESS >>>>									
CC670	S05F	GC1105	GC1115	GC1005	H10A	H13A	GC1025	GC1125	H10F
.004-.008-.012	.004-.008-.012	.004-.012-.020	.004-.012-.020	.004-.012-.020	.004-.012-.020	.004-.012-.020	.004-.012-.020	.004-.012-.020	.004-.012-.020
- -	520-435-355 410-345-280	490-325-225 390-260-195	395-260-180 315-210-155	490-325-225 390-260-195	280-230-180 215-180-130	260-210-160 195-165-130	245-195-145 180-145-115	245-195-145 180-145-115	230-180-130 165-130-95
1250-1050-880 1050-870-740 970-800-680	325-275-225 295-245-200 260-220-180	295-185-95 265-165-85 235-150-75	235-150-75 215-135-70 190-120-60	295-185-95 265-165-85 235-150-75	180-130-105 130-105-70 85-70-50	165-130-95 130-95-65 80-65-50	150-115-80 115-80-50 75-55-39	150-115-80 115-80-50 75-55-39	130-95-65 100-65-32 65-50-32
1150-830-660 980-720-570 930-730-550	325-275-225 290-245-200 260-220-180	295-185-95 265-165-85 235-150-75	240-150-75 210-135-70 190-120-60	295-185-95 265-165-85 235-150-75	180-130-105 130-105-70 85-70-50	165-130-95 130-95-65 80-65-50	150-115-80 115-80-50 75-55-39	150-115-80 115-80-50 75-55-39	130-95-65 100-65-32 65-50-32
H13A	H10F	GC1115	GC1025						
.004-.012-.020	.004-.012-.020	.004-.012-.020	.004-.012-.020						
590-485-410 245-200-165 235-175-150	530-440-370 220-180-145 210-155-135	610-500-425 255-205-170 245-180-155	530-440-370 220-180-145 210-155-135						

TOUGHNESS >>>>									
CB7525/CB50	CB7925	CC6050	CC650	CC670	GC4205	GC4215	H13A		
.004-.010-.016	.004-.010-.016	.002-.006-.010	.004-.010-.016	.004-.010-.016	.004-.012-.024	.004-.012-.024	.004-.012-.024		
- 680-540-435 570-455-365	- - -	950-770-570 780-630-470 660-530-395	670-495-330 550-410-270 460-345-225	670-550-440 550-450-365 460-375-305	225-155-95 - -	205-135-85	145-80-50 - -		
480-385-310 415-330-270	- -	560-450-335 480-390-290	395-290-195 340-250-165	390-320-260 335-275-225	- -		- -		
590-480-390	590-480-390	-	390-290-190	390-290-190	170-95-55	155-85-50	115-65-35		

Reamer 830

High feed precision tool for through holes

Fast and easy head change by front clamping

High surface finish and operation security

Effective chip evacuation by cutting fluid direct at each edge.

Cylindrical shank

Short and long shank options

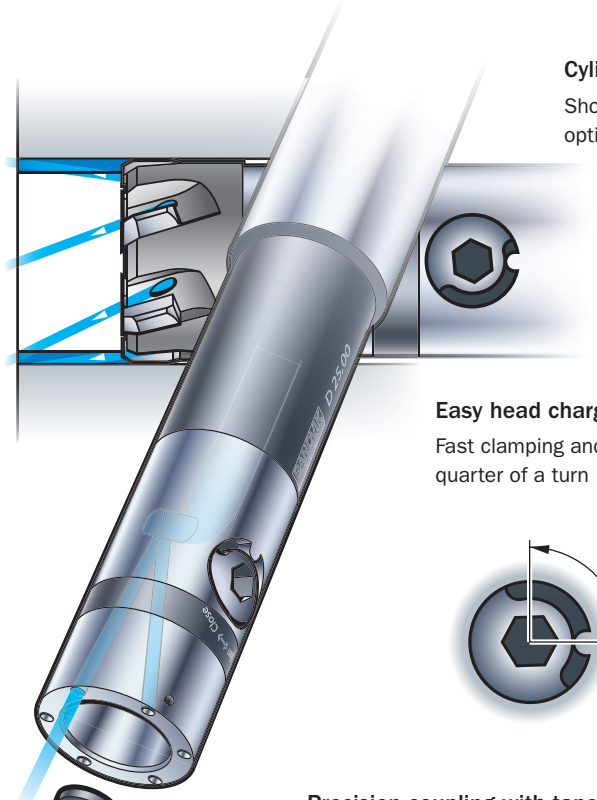

High penetration rate

fn = 0.4-1.5 mm/rev (.016-.059 inch/rev)
V_c = up to 200 m/min (650 ft/min)

Easy head charge

Fast clamping and releasing by a quarter of a turn

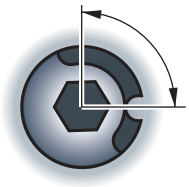

Clamping force:

D_c 10.0-23.0 mm (.394-.906 inch): 7 Nm (5.16 lbf-ft)
D_c 24.0-31.75 mm (.945-1.250 inch): 12 Nm (8.85 lbf-ft)

Precision coupling with taper and flange location

- accurate centering
- high rigidity
- concentricity
- high repeatability
- head change accuracy < 3 µm (.00012 µinch)

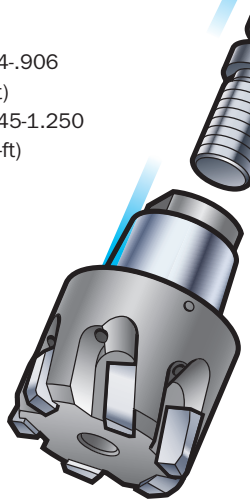

Ground for hole tolerance = H7

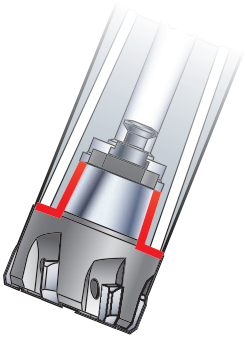

ISO application areas:

P K

SANDVIK Coromant

Reamer 830

for finishing of through holes

For hole diameters 10.00 - 31.75 mm (.394 - 1.250 inch)
Max hole depth, l_3

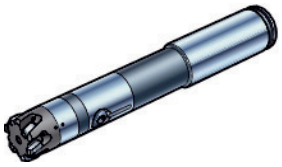

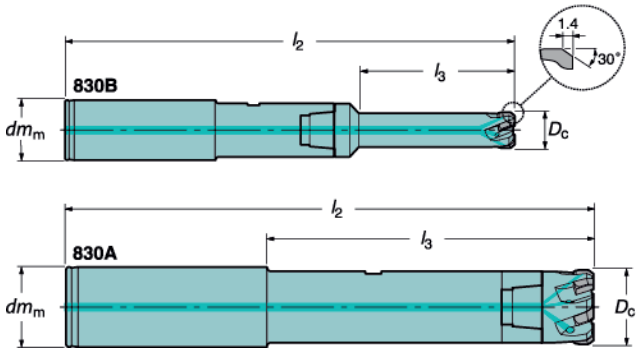

Rake angle	6°
Brazed inserts:	grade P10R (cermet)
Hole tolerance:	H7
Cutting fluid:	Internal
Shank design	Cylindrical
Tolerance dm_m	h6

For hole diameter			Head	Short shank				Long shank				
					Dimensions, mm (inch)				Dimensions, mm (inch)			
D_c mm	D_c inch	z_n	Ordering code	Ordering code	l_2	l_3	dm_m	Ordering code	l_2	l_3	dm_m	KG
10.0	.394	6	830B-E06D1000H7S12	830-S12A20035F[1]	145	45	20					0.22-0.23
					5.709	*1.772*	*.787*					
11.0	.433	6	830B-E06D1100H7S12	830-S12A20069F[1]	178.5	45	20	830-S12A20130F[1]	239.5	45	20	0.3-0.4
					7.028	*1.772*	*.787*		*9.429*	*1.772*	*.787*	
12.0	.472	6	830B-E06D1200H7S12									
13.0	.512	6	830B-E06D1300H7S12	830-S12A20035F[1]	145	45	20					0.24-0.26
					5.709	*1.772*	*.787*					
14.0	.551	6	830B-E06D1400H7S12	830-S12A20069F[1]	178.5	45	20	830-S12A20130F[1]	239.5	45	20	0.3-0.4
					7.028	*1.772*	*.787*		*9.429*	*1.772*	*.787*	
15.0	.591	6	830B-E06D1500H7S12									
16.0	.630	6	830B-E06D1600H7S12	830-S12A20035F[1]	145	45	20					0.27-0.29
					5.709	*1.772*	*.787*					
17.0	.669	6	830B-E06D1700H7S12	830-S12A20069F[1]	178.5	45	20	830-S12A20130F[1]	239.5	45	20	0.4-0.5
					7.028	*1.772*	*.787*		*9.429*	*1.772*	*.787*	
18.0	.709	6	830B-E06D1800H7S12									
19.0	.748	6	830A-E06D1900H7S12	830-S12A20035F[1]	99.5	49.5	20					
					3.917	*1.949*	*.787*					
19.05	.750	6	830A-E06D1905H7S12	830-S12A20069F[1]	133	83	20	830-S12A20130F[1]	194	144	20	0.4-0.5
					5.236	*3.268*	*.787*		*7.638*	*5.669*	*.787*	
20.0	.787	6	830A-E06D2000H7S12									
21.0	.827	6	830A-E06D2100H7S12									
22.0	.866	6	830A-E06D2200H7S14	830-S14A20070F[2]	135	85	20	830-S14A20131F[2]	196	146	20	0.5-0.6
					5.315	*3.346*	*.787*		*7.716*	*5.748*	*.787*	
23.0	.906	6	830A-E06D2300H7S14									
24.0	.945	6	830A-E06D2400H7S16									
25.0	.984	6	830A-E06D2500H7S16									
25.4	1.000	6	830A-E06D2540H7S16									
26.0	1.024	6	830A-E06D2600H7S16	830-S16A25090F[3]	166	106	25	830-S16A25151F[3]	227	167	25	0.5-0.7
					6.535	*4.173*	*.984*		*8.937*	*6.575*	*.984*	
27.0	1.063	6	830A-E06D2700H7S16									
28.0	1.102	6	830A-E06D2800H7S16									
29.0	1.142	6	830A-E06D2900H7S16									
30.0	1.181	6	830A-E06D3000H7S20	830-S20A25089F[3]	166	106	25	830-S20A25150F[3]	227	167	25	0.7-1.1
					6.535	*4.173*	*.984*		*8.937*	*6.575*	*.984*	
31.75	1.250	8	830A-E06D3175H7S20									

1) Delivered with retention knobs 5519 107-01 and 5519 106-01.
2) Delivered with retention knob 5519 106-01.
3) Delivered with retention knob 5519 106-02.

Ordering example: 1 piece 830B-E06D1000H7S12
1 piece 830-S12A20035F

Main spare parts

For reamer diameter	Key for head (mm)	Retention knob with cutting fluid through	Retention knob without cutting fluid through
10-18 mm (.394-.709 inch)	3021 010-040 (4.0)	5519 107-01	–
19-23 mm (.748-.906 inch)	3021 010-040 (4.0)	–	5519 106-01
24-31.75 mm (.945-.1.250 inch)	3021 010-050 (5.0)	–	5519 106-02

G6 F102 F2

Cutting data for Reamer 830

Metric values

ISO	CMC	Material	Hardness Brinell HB	Grade	Cutting speed V_c m/min	Feed f_z mm/rev	Radial depth of cut a_p mm
P		**Unalloyed steel**					
	01.1	Non-hardened 0.10-0.25% C	90-200	P10R	150-200	0.15-0.25	0.1-0.3
	01.2	Non-hardened 0.25-0.55% C	125-225		150-200	0.15-0.25	
	01.3	Non-hardened 0.55-0.80% C	150-225		140-180	0.15-0.25	
	01.4	High carbon and carbon tool steel	180-225		140-180	0.15-0.25	
		Low alloy steel					
	02.1	Non-hardened	150-260	P10R	110-180	0.15-0.25	0.1-0.3
	02.2	Hardened and tempered	220-400		70-130	0.10-0.20	
		Steel castings					
	06.1	Unalloyed	90-225	P10R	140-180	0.15-0.25	0.1-0.3
	06.2	Low alloyed	150-250		100-150	0.15-0.25	
K		**Malleable cast iron**					
	07.2	Pearlitic	150-270	P10R	150-200	0.15-0.25	0.1-0.3
		Nodular cast iron					
	09.2	Pearlitic	200-300	P10R	110-190	0.15-0.25	0.1-0.3

Inch values

ISO	CMC	Material	Hardness Brinell HB	Grade	Cutting speed V_c ft/min	Feed f_z inch/insert	Radial depth of cut a_p inch
P		**Unalloyed steel**					
	01.1	Non-hardened 0.10-0.25% C	90-200	P10R	490-650	.006-.010	.004-.012
	01.2	Non-hardened 0.25-0.55% C	125-225		490-650	.006-.010	
	01.3	Non-hardened 0.55-0.80% C	150-225		460-590	.006-.010	
	01.4	High carbon and carbon tool steel	180-225		460-590	.006-.010	
		Low alloy steel					
	02.1	Non-hardened	150-260	P10R	360-590	.006-.010	.004-.012
	02.2	Hardened and tempered	220-400		230-425	.004-.008	
		Steel castings					
	06.1	Unalloyed	90-225	P10R	460-590	.006-.010	.004-.012
	06.2	Low alloyed	150-250		330-490	.006-.010	
K		**Malleable cast iron**					
	07.2	Pearlitic	150-270	P10R	490-650	.006-.010	.004-.012
		Nodular cast iron					
	09.2	Pearlitic	200-300	P10R	360-620	.006-.010	.004-.012

CoroBore® 820

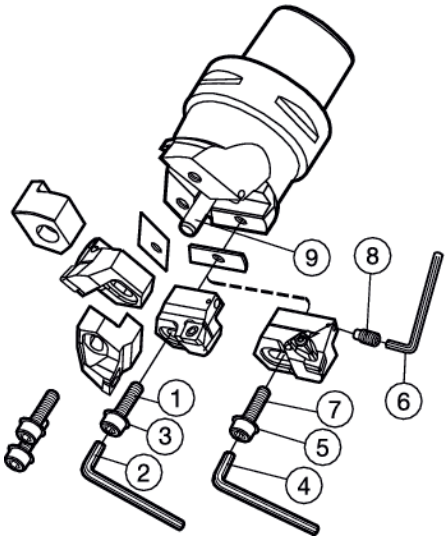

Adapter Cx-R820 HAxx-R820	1[3]	2[1]	3	4[1][2]	5[2]	6		7[2]
Size	Screw	Key (mm)	Cup spring	Key (mm)	Cup spring	Setting key (mm)		Screw
A	3212 010-299	3021 010-030 (3.0)	3846 010-014	–		3021 012-015	1.5	–
B	3212 010-309	3021 010-040 (4.0)	3846 010-023	–		3021 012-015	1.5	–
C	3212 010-397	3021 010-050 (5.0)	3846 010-033	–		3021 012-015	1.5	–
D	3212 010-360	3021 010-050 (5.0)	3846 010-033	–		174.1-870	2.0	–
E	3212 010-411	3021 010-060 (6.0)	3846 010-048	–		174.1-870	2.0	–
F	3212 010-462	3021 010-080 (8.0)	3846 010-069	–		5680 010-02	2.5	3212 010-462
G	3212 010-462	3021 010-080 (8.0)	3846 010-069	–		5680 010-02	2.5	3212 010-462
H	3212 010-462	3021 010-080 (8.0)	3846 010-069	3021 010-100 (10)	3846 010-085	5680 010-05	3.0	3212 010-513
I	3212 010-462	3021 010-080 (8.0)	3846 010-069	3021 010-100 (10)	3846 010-085	5680 010-05	3.0	3212 010-513

	8		9		
	Setting screw for	Setting screw for			
Size	R820x-AR	R820x-BR	Parallel pin	mm	Size
A	3214 020-207	3214 020-208	3111 020-462	4	4x24L
B	3214 020-208	3214 020-209	3111 020-514	5	5x26L
C	3214 020-207	3214 020-207	3111 020-566	6	6x32L
D	3214 020-258	3214 020-258	3111 020-618	8	8x35L
E	3214 020-259	3214 020-259	3111 020-670	10	10x45L
F	3214 020-310	3214 020-311	3111 020-721	12	12x50L
G	3214 020-311	3214 020-312	3111 020-721	12	12x50L
H	3214 020-362	3214 020-364	3111 020-773	16	16x60L
I	3214 020-362	3214 020-364	3111 020-773	16	16x60L

1) Accessories, must be ordered separately.
2) For clamping of CoroTurn® RC slides
3) For clamping of CoroTurn® 107 slides

CoroBore® 820

Insert clamping - CoroTurn® 107

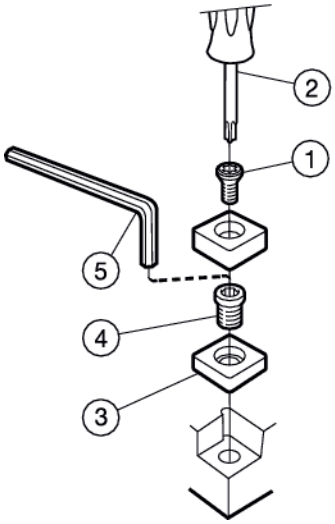

		1	2[1]	3	4	5
Entering angle	Slides	Insert screw	Key (Torx Plus)	Shim	Shim screw	Key (mm)
90°	R820A-xR11SCFC06A	5513 020-03	5680 046-03 (7IP)	–	–	–
90°	R820B-xR12SCFC06A	5513 020-03	5680 046-03 (7IP)	–	–	–
90°	R820B-xR14SCFC09A	5513 020-09	5680 046-02 (15IP)	–	–	–
90°	R820C-xR16SCFC09A	5513 020-09	5680 046-02 (15IP)	–	–	–
90°	R820C-xR18SCFC12A	5513 020-17	5680 046-02 (15IP)	–	–	–
90°	R820D-xR18SCFC09A	5513 020-09	5680 046-02 (15IP)	–	–	–
90°	R820D-xR18SCFC12A	5513 020-17	5680 046-02 (15IP)	–	–	–
90°	R820E-xR22SCFC12A	5513 020-17	5680 046-02 (15IP)	–	–	–
90°	R820F-xR24SCFC12A	5513 020-18	5680 046-02 (15IP)	5322 232-02	5512 090-03	5680 010-04 (4.0)
90°	R820G-xR24SCFC12A	5513 020-18	5680 046-02 (15IP)	5322 232-02	5512 090-03	5680 010-04 (4.0)
90°	R820H-xR26SCFC12A	5513 020-18	5680 046-02 (15IP)	5322 232-02	5512 090-03	5680 010-04 (4.0)
90°	R820I-xR26SCFC12A	5513 020-18	5680 046-02 (15IP)	5322 232-02	5512 090-03	5680 010-04 (4.0)
75°	R820A-xR11SCKC06A	5513 020-03	5680 046-03 (7IP)	–	–	–
75°	R820B-xR12SCKC06A	5513 020-03	5680 046-03 (7IP)	–	–	–
84°	R820B-xR14SSYC09A	5513 020-09	5680 046-02 (15IP)	–	–	–
84°	R820C-xR12SSYC06A	5513 020-09	5680 046-02 (15IP)	–	–	–
84°	R820C-xR18SSYC12A	5513 020-17	5680 046-02 (15IP)	–	–	–
84°	R820D-xR18SSYC09A	5513 020-09	5680 046-02 (15IP)	–	–	–
84°	R820D-xR18SSYC12A	5513 020-17	5680 046-02 (15IP)	–	–	–
84°	R820E-xR22SSYC12A	5513 020-17	5680 046-02 (15IP)	–	–	–
84°	R820F-xR24SSYC12A	5513 020-18	5680 046-02 (15IP)	5322 420-02	5512 090-03	5680 010-04 (4.0)
84°	R820G-xR24SSYC12A	5513 020-18	5680 046-02 (15IP)	5322 420-02	5512 090-03	5680 010-04 (4.0)
84°	R820H-xR26SSYC12A	5513 020-18	5680 046-02 (15IP)	5322 420-02	5512 090-03	5680 010-04 (4.0)
84°	R820I-xR26SSYC12A	5513 020-18	5680 046-02 (15IP)	5322 420-02	5512 090-03	5680 010-04 (4.0)
95°	R820A-xR11SCLC06A	5513 020-03	5680 046-03 (7IP)	–	–	–
95°	R820B-xR12SCLC06A	5513 020-03	5680 046-03 (7IP)	–	–	–
95°	R820B-xR14SCLC09A	5513 020-09	5680 046-02 (15IP)	–	–	–
95°	R820C-xR16SCLC09A	5513 020-09	5680 046-02 (15IP)	–	–	–
95°	R820C-xR18SCLC12A	5513 020-17	5680 046-02 (15IP)	–	–	–
95°	R820D-xR18SCLC09A	5513 020-09	5680 046-02 (15IP)	–	–	–
95°	R820D-xR18SCLC12A	5513 020-17	5680 046-02 (15IP)	–	–	–
95°	R820E-xR22SCLC12A	5513 020-17	5680 046-02 (15IP)	–	–	–
95°	R820F-xR24SCLC12A	5513 020-18	5680 046-02 (15IP)	5322 232-02	5512 090-03	5680 010-04 (4.0)
95°	R820G-xR24SCLC12A	5513 020-18	5680 046-02 (15IP)	5322 232-02	5512 090-03	5680 010-04 (4.0)
95°	R820H-xR26SCLC12A	5513 020-18	5680 046-02 (15IP)	5322 232-02	5512 090-03	5680 010-04 (4.0)
95°	R820I-xR26SCLC12A	5513 020-18	5680 046-02 (15IP)	5322 232-02	5512 090-03	5680 010-04 (4.0)

1) Accessories, must be ordered separately.

CoroBore® 820

Insert clamping - CoroTurn® RC

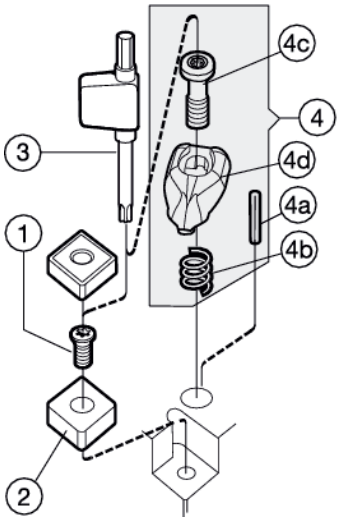

CoroTurn® RC for ceramic inserts

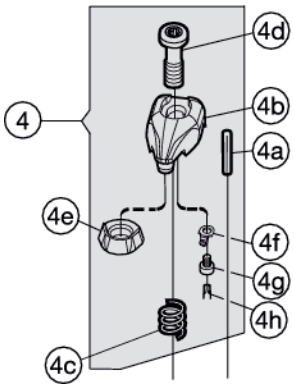

4a	Pin
4b	Clamp
4c	Compression spring
4d	Screw
4e	Pressure plate
4f	Hook
4g	Screw
4h	Key (Torx)

CoroTurn® RC rigid clamp slides

Entering angle	Slides	1 Shim screw	2 Shim	3[1] Key (Torx Plus)	4 Complete clamp set	4a Pin	4b Compression spring	4c Screw	4d Clamp
90°	R820F-xR24DCFN12A	5513 020-02	5322 234-01	5680 046-02 (15IP)	5412 028-021	3113 030-307	5561 001-58	5512 086-02	5412 028-02
	R820G-xR24DCFN12A	5513 020-02	5322 234-01	5680 046-02 (15IP)	5412 028-021	3113 030-307	5561 001-58	5512 086-02	5412 028-02
	R820H-xR36DCFN16A	5513 020-07	5322 234-03	5680 046-06 (20IP)	5412 028-031	3113 030-307	5561 001-59	5512 086-03	5412 028-03
	R820I-xR36DCFN16A	5513 020-07	5322 234-03	5680 046-06 (20IP)	5412 028-031	3113 030-307	5561 001-59	5512 086-03	5412 028-03
84°	R820F-xR24DSYN12A	5513 020-02	5322 425-01	5680 046-02 (15IP)	5412 028-021	3113 030-307	5561 001-58	5512 086-02	5412 028-02
	R820G-xR24DSYN12A	5513 020-02	5322 425-01	5680 046-02 (15IP)	5412 028-021	3113 030-307	5561 001-58	5512 086-02	5412 028-02
	R820H-xR36DSYN15A	5513 020-07	5322 425-03	5680 046-06 (20IP)	5412 028-031	3113 030-307	5561 001-59	5512 086-03	5412 028-03
	R820I-xR36DSYN15A	5513 020-07	5322 425-03	5680 046-06 (20IP)	5412 028-031	3113 030-307	5561 001-59	5512 086-03	5412 028-03
95°	R820F-xR24DCLN12A	5513 020-02	5322 234-01	5680 046-02 (15IP)	5412 028-021	3113 030-307	5561 001-58	5512 086-02	5412 028-02
	R820F-xR24DCLN12A	5513 020-02	5322 234-01	5680 046-02 (15IP)	5412 028-021	3113 030-307	5561 001-58	5512 086-02	5412 028-02
	R820H-xR36DCLN16A	5513 020-07	5322 234-03	5680 046-06 (20IP)	5412 028-031	3113 030-307	5561 001-59	5512 086-03	5412 028-03
	R820I-xR36DCLN16A	5513 020-07	5322 234-03	5680 046-06 (20IP)	5412 028-031	3113 030-307	5561 001-59	5512 086-03	5412 028-03

1) Accessories, must be ordered separately.

CoroTurn® RC rigid clamp slides for ceramic inserts

Entering angle	Slides	1 Shim screw	2 Shim (For insert thickness)	3[1] Key (Torx Plus)	4 Complete clamp set
90°	R820F-xR24DCFN12A	5513 020-02	5322 234-02 (7.94)	5680 046-02 (15IP)	5412 034-021[2]
	R820G-xR24DCFN12A				5412 032-021[3]
	R820H-xR36DCFN16A	5513 020-07	5322 234-04 (7.94)	5680 046-06 (20IP)	5412 034-031[2]
	R820I-xR36DCFN16A				5412 032-031[3]
84°	R820F-xR24DSYN12A	5513 020-02	5322 425-02 (7.94)	5680 046-02 (15IP)	5412 034-021[2]
	R820G-xR24DSYN12A				5412 032-021[3]
	R820H-xR36DSYN15A				5412 034-031[2]
	R820I-xR36DSYN15A	5513 020-07	5322 425-05 (7.94)	5680 046-06 (20IP)	5412 032-031[3]
95°	R820F-xR24DCLN12A	5513 020-02	5322 234-02 (7.94)	5680 046-02 (15IP)	5412 034-021[2]
	R820G-xR24DCLN12A				5412 032-021[3]
	R820H-xR36DCLN16A	5513 020-07	5322 234-04 (7.94)	5680 046-06 (20IP)	5412 034-031[2]
	R820I-xR36DCLN16A				5412 032-031[3]

Components for spare part number 4, Complete clamp set

Sizes R820F and R820G		Sizes R820H and R820I	
4a	3113 030 -307	4a	3113 030-307
4b	5412 034-02	4b	5412 034-03
4c	5661 001-58	4c	5561 001-59
4d	5512 086-02	4d	5512 086-03
4e	5192 030-02	4e	5192 030-03
4f	5411 012-01	4f	5411 012-01
4g	5212 097-01	4g	5512 097-01
4h	5680 051-02 (7IP)	4h	5680 051-02 (7IP)
	Accessories:		Accessories:
4b[3]	5412 032-03	4b[3]	5412 032-03

1) Accessories, must be ordered separately.
2) Clamp set for flat inserts without hole
3) Clamp for flat inserts with hole

CoroBore® 820 XL

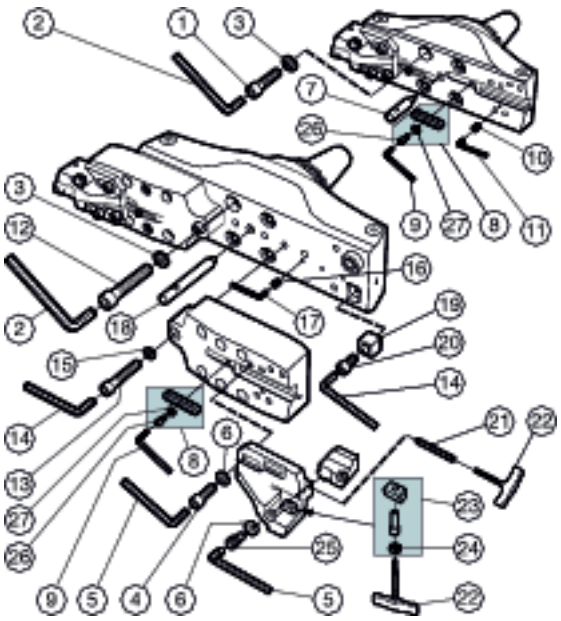

Bridge	1	2[1]	3	4	5[1]
Bridge sizes M, N and O	Screw	Key (mm)	Washer	Screw	Key (mm)
	3212 010-569	3021 010-140 (14.0)	3411 012-170	3212 010-462	3021 010-080 (8.0)

6	7	8[1]	9[1]	10	11[1]
Cup spring	Parallel pin set	Stop plate set	Key (mm)	Screw	Key (mm)
3846 010-069	5552 047-01	5335 001-01	3021 010-050 (5.0)	3214 010-355	3021 010-030 (3.0)

Bridge	2[1]	3	12	13	14[1]
Bridge sizes P, Q and R	Key (mm)	Washer	Screw	Screw	Key
	3021 010-140 (14.0)	3411 012-170	3212 010-572	3212 010-518	3021 010-100 (10.0)

15	16	17[1]	18	19	20
Washer	Screw	Key	Parallel pin set	Driving key	Screw
3411 012-130	3214 010-406	3021 010-040 (4.0)	5552 047-02	3193 110-050	3212 010-511

Bridge extension	4	5[1]	6	8[1]	9[1]
	Screw	Key (mm)	Cup spring	Stop plate set	Key (mm)
A35-RXLS24-A 060	3212 010-462	3021 010-080 (8.0)	3846 010-069	5335 001-01	3021 010-050 (5.0)

Slide	21	22[1]	23	24
	Screw	Key (mm)	Wedge set	Circlip
S24-R820XLS12-012	3214 020-368	265.2-817 (3.0)	5332 070-01	3421 110-009

Cartridge	5[1]	6	25
	Key (mm)	Cup spring	Screw
S12-R820XLR40	3021 010-080 (8.0)	3846 010-069	3212 010-461

8. Stop plate set[1]	9[1]	26	27
	Key (mm)	Screw	Washer
5335 001-01	3021 010-050 (5.0)	3212 010-359	3411 011-064

[1] Accessories, must be ordered separately.

SANDVIK Coromant

CoroBore® 820 XL

Insert clamping - CoroTurn® 107

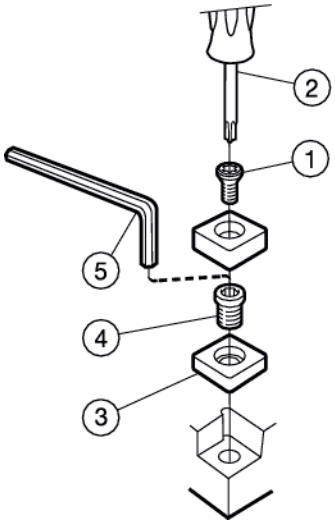

Entering angle	Lead angle	Cartridge	1 Insert screw	2[1] Key (Torx Plus)
90°	0°	S12-R820XLR40SCFC12	5513 020-18	5680 046-02 (15IP)
90°	0°	S12-R820XLR40STFC22		
84°	6°	S12-R820XLR40SSYC12		

3 Shim	4 Shim screw	5[1] Key (mm)
5322 232-02	5512 090-03	5680 010-040 (4.0)

[1] Accessories, must be ordered separately

Insert clamping - CoroTurn® RC

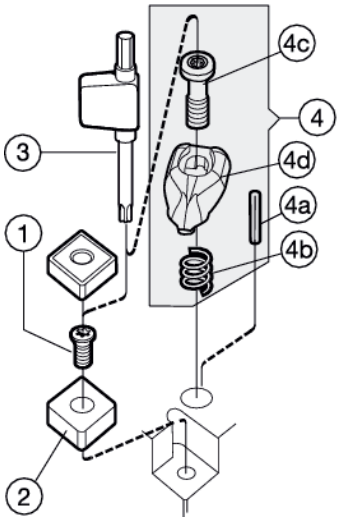

Entering angle	Lead angle	Cartridge	1 Shim screw	2 Shim	3[1] Key (Torx Plus)
90°	0°	S12-R820XLR40DCFN19	5513 020-07	5322 236-01	5680 046-06 (20IP)
84°	6°	S12-R820XLR40DSYN15	5513 020-07	5322 425-03	5680 046-06 (20IP)

4 Complete clamp set	4a Pin	4b Compression spring	4c Screw	4d Clamp
5412 028-041	3113 030-307	5561 001-59	5512 086-03	5412 028-04
5412 028-031	3113 030-307	5561 001-59	5512 086-03	5412 028-03

[1] Accessories, must be ordered separately

CoroTurn® RC rigid clamp slides for ceramic inserts

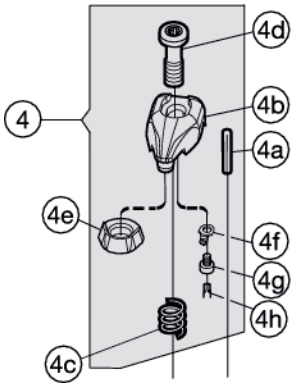

Entering angle	Lead angle	Cartridge	1 Shim screw	2 Shim (For insert thickness)	3[1] Key (Torx Plus)	4 Complete clamp set
84°	6°	S12-R820XLR40DSYN	5513 020-07	5322 425-05 (7.94)	5680 046-06 (20IP)	5412 034-031[2] 5412 032-031[3]

Components for spare part number 4, Complete clamp set

4a	4b[2]	4b[3]	4c	4d	4e	4f	4g	4h
3113 030 -307	5412 034-02	5412 032-03	5661 001-58	5512 086-02	5192 030-02	5411 012-01	5212 097-01	5680 051-02 (7IP)

[1] Accessories, must be ordered separately.
[2] Clamp set for flat inserts without hole
[3] Clamp set for flat inserts with hole

DuoBore®

391.68A and 391.69A

Boring diameter 25–150 mm

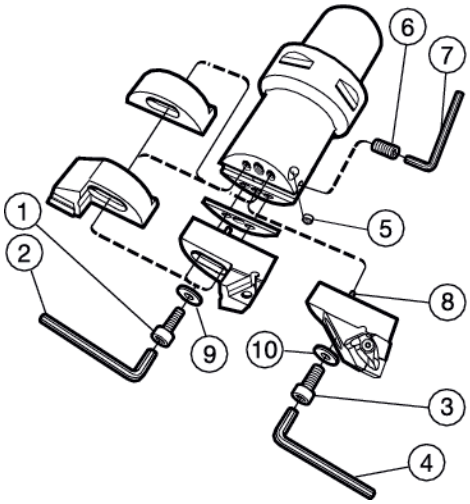

Adapter	1	2[1]	3[2]	4[1][2]	5	6	7[1]
Size	Screw	Key (mm)	Screw	Key (mm)	Nozzle	Setting screw	Key (mm)
1	3212 010-299	3021 010-030 (3.0)	–	–	5691 040-03	5514 060-09	174.1-870 (2.0)
2	3212 010-299	3021 010-030 (3.0)	–	–	5691 040-03	5514 060-01	174.1-870 (2.0)
3	3212 010-299	3021 010-030 (3.0)	–	–	5691 040-01	5514 060-10	174.1-870 (2.0)
4	3212 010-309	3021 010-040 (4.0)	–	–	5691 040-01	5514 060-10	174.1-870 (2.0)
5	3212 010-361	3021 010-050 (5.0)	–	–	5691 040-01	5514 060-11	174.1-870 (2.0)
6	3212 010-396	3021 010-050 (5.0)	3212 010-462	3021 010-080 (8.0)	5691 029-08	5514 060-12	3021 010-025 (2.5)
7	3212 010-412	3021 010-060 (6.0)	3212 010-513	3021 010-100 (10.0)	5691 029-09	5514 060-13	3021 010-030 (3.0)

Adapter	8	9[3]	10[2]
Size	Tension pin	Washer	Washer
1	3113 025-305	3411 011-043	
2	3113 025-305	3411 011-043	
3	3113 025-305	3411 011-043	
4	3113 025-305	3411 011-053	
5	3113 025-406	3411 011-064	
6	3113 025-457	3411 011-064	3411 012-105
7	3113 025-457	3411 011-084	3411 012-130

1) Accessories, must be ordered separately.
2) For clamping of RC-slides.
3) For CoroTurn® 107 slides

DuoBore®

391.68A

Boring diameter 148–270 mm (tool with cartridge)

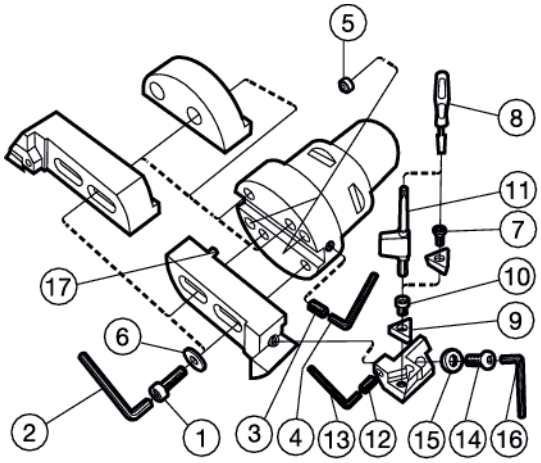

Adapter	Size	1 Screw	2[1] Key (mm)	3 Setting screw	4[1] Key (mm)	5 Nozzle	6[1] Washer
C8-391.68A-	8	3212 010-463	3021 010-080 (8.0)	5514 060-14	3021 010-030 (3.0)	5691 029-10	3411 012-105

Cartridge	7 Insert screw	8[1] Key (Torx Plus)	9 Shim	10 Shim screw	11[1] Key (Torx Plus)
391.68A-8-T16 A	5513 020-01	5680 049-02 (15IP)	5322 320-01	5512 090-01	5680 049-01 (15IP)
391.68A-8-T22 A	5513 020-18	5680 049-02 (15IP)	5322 320-02	5512 090-03	5680 049-02 (15IP)
391.68B-8-S12 A	5513 020-18	5680 049-02 (15IP)	5322 420-02	5512 090-03	5680 049-02 (15IP)

Cartridge	12 Adjustment screw	13[1] Key (mm)	14 Mounting screw	15 Washer	16[1] Key (mm)
391.68A-8-T16 A	3214 010-357	174.1-864 3.0	434.9-830	3411 011-084	3021 010-050 5.0
391.68A-8-T22 A	3214 010-357	174.1-864 3.0	434.9-830	3411 011-084	3021 010-050 5.0
391.68B-8-S12 A	3214 010-357	174.1-864 3.0	434.9-830	3411 011-084	3021 010-050 5.0

Slide	17 Tension pin
391.68x	3113 025-559

[1] Accessories, must be ordered separately.

DuoBore® arbor adapter

393.69A

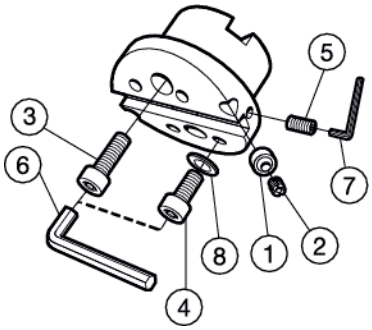

393.69A-7-27 060A
393.69A-7-32 060A

1	2[1]	3	4	5	6[1]	7[1]	8
Nozzle	Nozzle reduction	Screw	Screw	Setting screw	Key (mm)	Key (mm)	Washer
5691 029-03	5691 025-02	3212 010-416	3212 010-412	5514 060-13	3021 010-060 (6.0)	174.1-864 (3.0)	3411 012-084

1) Accessories, must be ordered separately.

Duobore®

Insert clamping - CoroTurn® 107

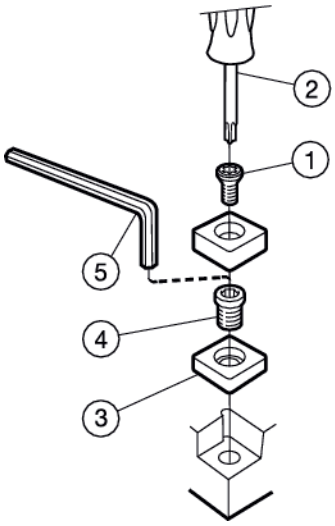

Slides	1	2[1]	3	4	5[1]
90°	Insert screw	Key (Torx Plus)	Shim	Shim screw	Key (mm)
391.68A-1-032 13 C06 B 391.68A-2-038 13 C06 B 391.68A-3-047 16 T11 B	5513 020-03	5680 046-03 (7IP)	–	–	–
391.68F-3-047 16 TC11 B	5513 020-03	5680 046-03 (7IP)	–	–	–
391.68A-4-056 24 T16 B 391.68A-5-070 26 T16 B 391.68A-6-084 30 T16 B	5513 020-10	5680 046-02 (15IP)	–	–	–
391.68A-6-101 30 T16 B 391.68A-7-125 40 T16 B 391.68A-7-150 40 T16 B	5513 020-01	5680 046-02 (15IP)	5322 320-01	5512 090-01	5680 010-01 (3.5)
391.68A-6-101 41 T22 B	5513 020-07	5680 046-06 (20IP)	–	–	–
391.68A-7-125 40 T22 B 391.68A-7-150 40 T22 B	5513 020-18	5680 046-02 (15IP)	5322 320-02	5512 090-03	3021 010-040 (4.0)
75°					
391.68B-1-032 13 C06 B 391.68B-2-038 13 C06 B 391.68B-3-047 16 C06 B	5513 020-03	5680 046-03 (7IP)	–	–	–
391.68B-4-056 24 S09 B 391.68B-5-070 26 S09 B	5513 020-09	5680 046-02 (15IP)	–	–	–
391.68B-6-084 30 S12 B 391.68B-6-101 41 S12 B	5513 020-17	5680 046-02 (15IP)	–	–	–
391.68B-7-125 40 S12 B 391.68B-7-150 40 S12 B	5513 020-18	5680 046-02 (15IP)	5322 420-02	5512 090-03	3021 010-040

1) Accessories, must be ordered separately.

DuoBore®

Insert clamping - CoroTurn® RC

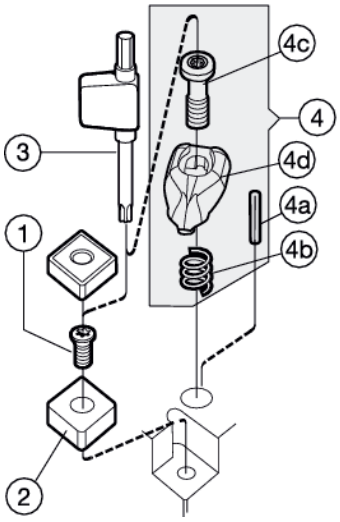

CoroTurn® RC for ceramic inserts

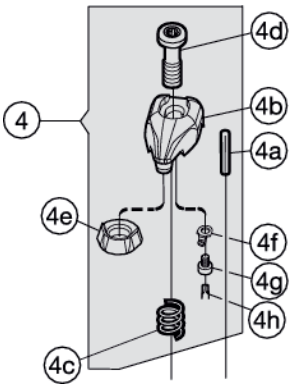

4a	Pin
4b	Clamp
4c	Compression spring
4d	Screw
4e	Pressure plate
4f	Hook
4g	Screw
4h	Key (Torx)

CoroTurn® RC rigid clamp slides

Slides	1	2	3[1]	4	4a	4b	4c	4d
90°/0°	Shim screw	Shim	Key (Torx Plus)	Complete clamp set	Pin	Compression spring	Screw	Clamp
391.68F-6-084 36 C12 A 391.68F-6-101 36 C12 A 391.68F-7-125 40 C12 A 391.68F-7-150 40 C12 A	5513 020-02	5322 234-01	5680 049-02 (15IP)	5412 028-021	3113 030-307	5561 001-58	5512 086-02	5412 028-02
391.68F-7-125 40 C16 A 391.68F-7-150 40 C16 A	5513 020-07	5322 234-03	5680 049-03 (9IP)	5412 028-031	3113 030-307	5561 001-59	5512 086-03	5412 028-03
84°/6°								
391.68D-6-084 36 S12 A 391.68D-6-101 36 S12 A 391.68D-7-125 40 S12 A 391.68D-7-150 40 S12 A	5513 020-02	5322 425-01	5680 049-02 (15IP)	5412 028-021	3113 030-307	5561 001-58	5512 086-02	5412 028-02
391.68D-7-125 44 S15 A 391.68D-7-150 44 S15 A	5513 020-07	5322 425-03	5680 049-03 (9IP)	5412 028-031	3113 030-307	5561 001-59	5512 086-03	5412 028-03

1) Accessories, must be ordered separately.

CoroTurn® RC rigid clamp slides for ceramic inserts

Slides	1	2	3[1]	4	Components for spare part number 4, Complete clamp set			
					Spare parts	Slides		
90°/0°	Shim screw	Shim (For insert thickness)	Key (Torx Plus)	Complete clamp set		**0° /C12A**	**0°/16A**	**6°/S12A**
391.68C-6-084 36 C12 A 391.68C-6-101 36 C12 A 391.68C-7-125 40 C12 A 391.68C-7-150 40 C12 A	5513 020-02	5322 234-02 (7.94)	5680 049-02 (15IP)	5412 034-021[2] 5412 032-021[3]	4a 4b 4c 4d	3113 030-307 5412 034-02 5661 001-58 5512 086-02	3113 030-307 5412 034-03 5661 001-59 5512 086-03	3113 030-307 5412 034-02 5661 001-58 5512 086-02
391.68C-7-125 40 C16 A 391.68C-7-150 40 C16 A	5513 020-07	5322 234-04 (7.94)	5680 049-03 (9IP)	5412 034-031[2] 5412 032-031[3]	4e 4f	5192 030-02 5411 012-01	5192 030-03 5411 012-01	5192 030-02 5411 012-01
84°/6°					4g 4h	5512 097-01 5680 051-02	5512 097-01 5680 051-02	5512 097-01 5680 051-02
391.68D-6-084 36 S12 A	5513 020-02	5322 425-02	5680 049-02	5412 034-021[2]				
391.68D-6-101 36 S12 A 391.68D-7-125 40 S12 A 391.68D-7-150 40 S12 A		(7.94)	(15IP)	5412 032-021[3]		Accessories:		
					4b[3]	5412 032-03	5412 032-03	5412 032-03
						Shim (For insert thickness)		
						5322 234-01 (4.76)	5322 234-03 (6.35)	5322 425-01 (4.76)

1) Accessories, must be ordered separately.
2) Clamp set for flat insert without hole
3) Clamp for flat inserts with hole

Heavy duty boring tools R391.B...R, Dc 150–300 mm (5.906-11.811 inch)

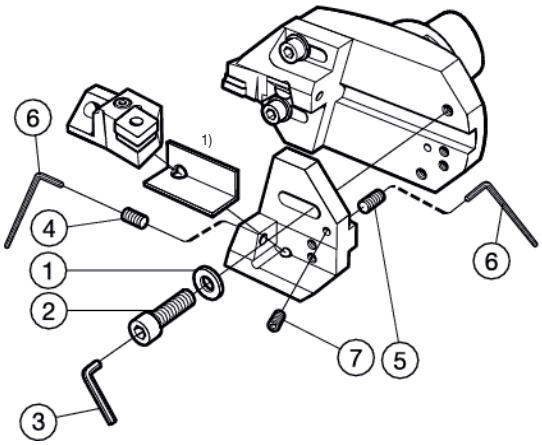

Bar

C8-R391.B11R-B 070A C8-R391.B12R-C 070A C8-R822S17-AL 070A	1	2	3	4	5	6	7[2]
Extension slide	Washer	Screw	Key (mm)	Radial adjustment screw	Axial adjustment screw	Key (mm)	Nozzle reduction
R391.B04R-2515	3411 013-105	3212 010-462	3021 010-080 (8.0)	5519 026-06	5519 026-06	3021 010-040 (4.0)	5691 025-01
R391.B03R-3015	3411 013-105	3212 010-462	3021 010-080 (8.0)	5519 026-06	5519 026-06	3021 010-040 (4.0)	5691 025-01

1) To be used between cartridge and slide for step boring.
2) Accessories, must be ordered separately.

Cartridges
T-Max P

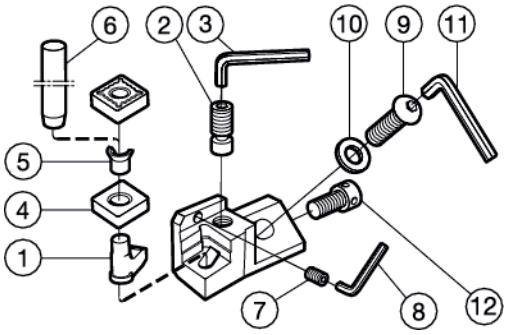

		1	2	3[3]	4	5	6	
		Lever	Screw	Key (mm)	Shim	Shim pin	Assembly punch	Optional shim
PTGNL 20CA-22	22	174.3-841M	174.3-821	174.1-864 (3.0)	179.3-852M[1]	174.3-861	174.3-871	179.3-853M[2]
PSRNL 20CA-15	15	438.3-840	438.3-831	174.1-864 (3.0)	174.3-857	174.3-864	174.3-873	–
L441.31-2030-1911	19	174.3-849M	174.3-835	3021 010-040 (4.0)	171.31-851M	174.3-868	174.3-872	–

		7	8[3]	9	10	11[3]	12[4]
		Screw	Key (mm)	Screw	Washer	Key (mm)	Screw
PTGNL 20CA-22	22	438.3-821	174.1-863 (2.5)	3212 010-412	3411 011-084	3021 010-060 (6.0)	438.3-828
PSRNL 20CA-15	15						
L441.31-2030-1911	19	–	–	3212 010-412	3411 011-084	3021 010-060 (6.0)	438.3-328

1) For inserts with r_ε = 1.2 and 1.6 mm (.047 and .063 inch).
2) For inserts with r_ε = 0.4 and 0.8 mm (.016 and .031 inch).
3) Accessories, must be ordered separately.
4) Only used for HD D_c 9.843-21.654 (250-550 mm)

Heavy duty boring tools R391.B, D_c 250–550 mm (9.843-21.654 inch)

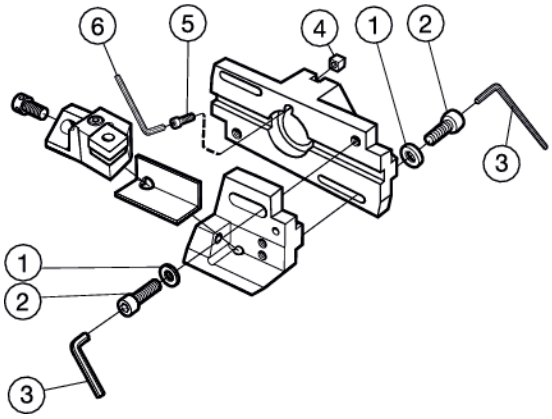

Bar

R391.B01R-40 D 053A R391.B02R-40 E 053A R391.B02R-40 F 053A	1	2	3[1]	4[1]	5[1]	6
Extension slide	Washer	Screw	Key (mm)	Driving key	Screw	Key (mm)
R391.B05R-3015	3411 010-105	3212 010-462	3021 010-080 (8.0)	5631 052-01	3212 010-361	3021 010-060 (6.0)
R391.B02R-2012A	3411 010-105	3212 010-461	3021 010-080 (8.0)	5631 052-01	3212 010-361	3021 010-060 (6.0)

1) Must be ordered separately.

Cartridges

Insert clamping - CoroTurn® 107

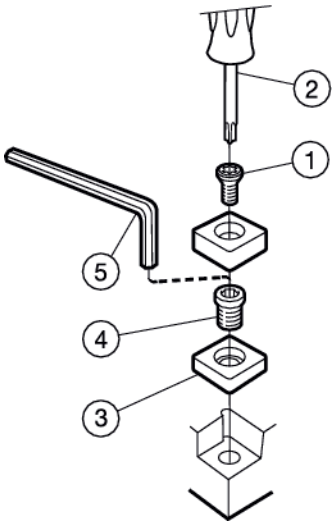

T-Max P

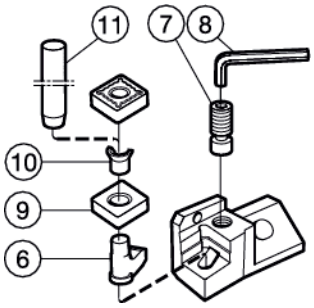

Adjustment and setting

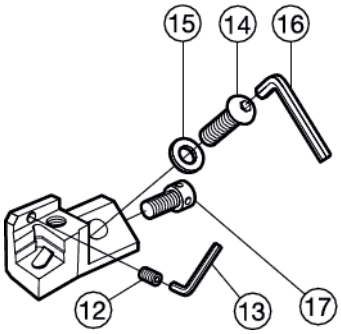

CoroTurn® 107		1	2[3]	3	4	
		Insert screw	Key (Torx Plus)	Shim	Shim screw	Optional key (Torx Plus)
L430.5A-2520-22	22	5513 020-18	5680 049-02 (15IP)	5322 320-02	5512 090-03	5680 046-02 (15IP)

T-Max P				6	7	8[3]	9	10	11	
				Lever	Screw	Key (mm)	Shim	Shim pin	Assembly punch	Optional shim
PTGNL 20CA-22	22			174.3-841M	174.3-821	174.1-864 (3.0)	179.3-852M[1]	174.3-861	174.3-871	179.3-853M[2]
PSRNL 20CA-15		15		438.3-840	438.3-831	174.1-864 (3.0)	174.3-857	174.3-864	174.3-872	–
L441.31-2030-1911			19	174.3-849M	174.3-835	3021 010-040	171.31-851M	174.3-868	174.3-873	–

Adjustment and setting				12	13[3]	14	15	16[3]	17
				Screw	Key (mm)	Screw	Washer	Key (mm)	Screw
T-Max P PTGNL 20CA-22	22			438.3-821	174.1-863 (2.5)	3212 010-412	3411 011-084	3021 010-060 (6.0)	438.3-839
PSRNL 20CA-15		15		438.3-821	174.1-863 (2.5)	3212 010-412	3411 011-084	3021 010-060 (6.0)	438.3-839
L441.31-2030-1911			19	–	–	3212 010-412	3411 011-084	3021 010-060 (6.0)	–
CoroTurn® 107 L430.5A-2520-22	22			434.9-836	174.1-870 (1.98)	3212 010-412	3411 011-084	3021 010-060 (6.0)	438.3-828

3) Accessories, not delivered with the tool, must be ordered separately.

CoroBore® 825

Boring range 19 - 176.6 mm (.748 - 6.575 inch)

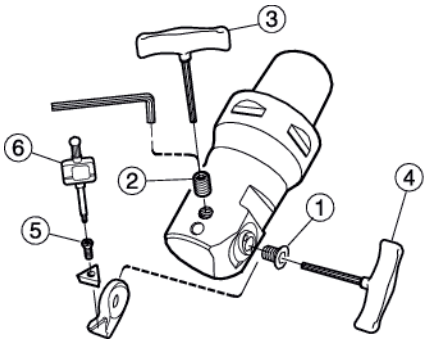

Cartridge	5 Insert screw	6[1] Key
R825A	5513 020-28	5680 051-01 (6IP)
R825B	5513 020-05	5680 046-03 (7IP)
R825C TC/TP11	5513 020-03	5680 046-03 (7IP)
R825C CC09	5513 020-09	5680 046-02 (15IP)

Boring diameter mm (inch)	Size	1 Screw for cartridge	2 Locking screw	3[1] Key (mm)	4[1] Key (mm)	Screw for slide extension
19 - 23 (.748 - .906)	18	5513 010-06	5519 026-09	5680 012-02 (2.0)	5680 012-02 (2.0)	5513 010-09
23 - 29 (.906 - 1.142)	A	5513 010-06	5519 026-09	5680 012-02 (2.0)	5680 012-02 (2.0)	5513 010-09
28 - 36 (1.102 - 1.417)	A	5513 010-06	5519 026-11	265.2-815 (2.5)	5680 012-02 (2.0)	5513 010-09
35 - 45 (1.378 - 1.772)	B	5513 010-07	5519 026-12	265.2-817 (3.0)	265.2-817 (3.0)	5513 010-10
44 - 56 (1.732 - 2.205)	B	5513 010-07	437.5-822	265.2-817 (3.0)	265.2-817 (3.0)	5513 010-10
55 - 70 (2.165 - 2.756)	C	5513 010-08	5519 026-10	265.2-821 (4.0)	265.2-821 (4.0)	5513 010-11
69 - 87 (2.717 - 3.425)	C	5513 010-08	470-872	265.2-821 (4.0)	265.2-821 (4.0)	5513 010-11
86 - 167 (3.386 - 6.575)	C	5513 010-08	470-873	265.2-821 (4.0)	265.2-821 (4.0)	5513 010-11

[1] Accessories, must be ordered separately.

CoroBore® 825/CoroBore® 826

Boring Range 5.906 - 12.779 inch (150 - 324.6 mm) with slide extension

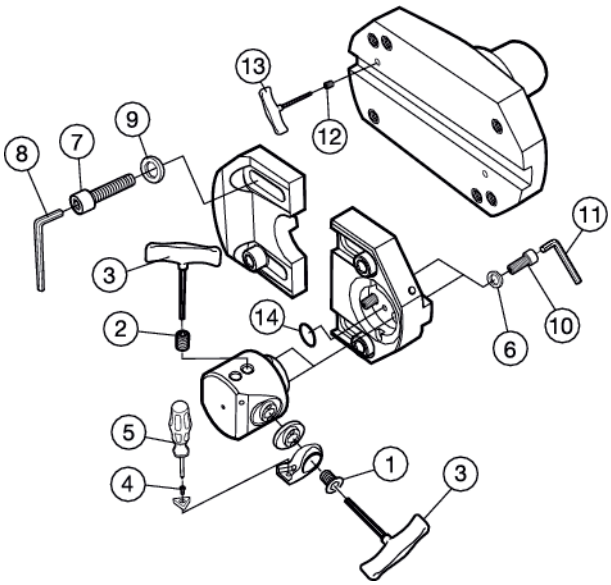

Fine boring head	1 Screw for cartridge	2 Locking screw	3[1] Key (mm)	6 Washer
A34-R825C/826C	5513 010-08	5519 026-10	265.2-821 (4.0)	3411 010-064

Cartridge	4 Insert screw	5[1] Key (Torx Plus)
R825C TC/TP11	5513 020-03	5680 046-03 (7IP)
R825C CC09	5513020-09	5680 046-02 (15IP)

Adapter	7 Screw	8[1] Key (mm)	9 Washer	10 Screw	11 Key (mm)	12 Screw	13[1] Key (mm)	14 O-ring
C6-R825S	3212 010-462	3021 010-080 (8.0)	3411 013-105	3212 010-360	3021 010-050 (5.0)	3214 010-355	3021 010-030 (3.0)	3671 010-016
C8-R391.B	3212 010-462	3021 010-080 (8.0)	3411 013-105	3212 010-360	3021 010-050 (5.0)	3214 010-355	3021 010-030 (3.0)	3671 010-016
C8-R822S	3212 010-462	3021 010-080 (8.0)	3411 013-105	3212 010-360	3021 010-050 (5.0)	3214 010-355	3021 010-030 (3.0)	3671 010-016

[1] Accessories, must be ordered separately.

SANDVIK Coromant

CoroBore® 825

Boring range 9.843 - 22.898 inch

With internal coolant supply

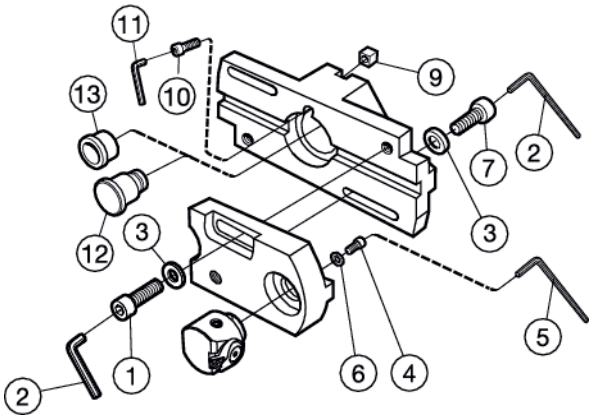

	1	2	3	4	5	6	
Extension slide	Screw	Key (mm)	Washer	Screw	Key (mm)	Washer	
R391.B01F-020	3212 010-462	3021 010-080 (8.0)	3411 010-105	3212 010-411	3021 010-060 (6.0)	3411 011-084	

	7	8	9[1]	10[1]	11	12[2]	13[3]
Extension slide	Screw	Key (mm)	Driving key	Screw	Key (mm)	Varilock adapter	Bushing
R391.B01F-020	3212 010-463	3021 010-080 (8.0)	5631 052-01	3212 010-361	3021 010-060 (6.0)	391.610-40 80 053	5541 018-01

1) For use with Varilock adapter. Must be ordered separately.
2) Varilock adapter. Must be ordered separately.
3) For use with milling arbor. Must be ordered separately.

Boring range 9.842 - 38.645 inch

With external coolant supply

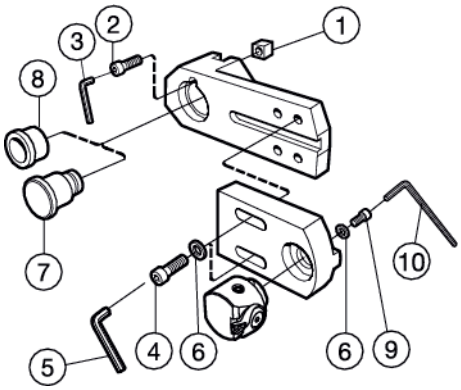

Bar

	1	2	3	4	5
Extension slide	Driving key	Screw	Key (mm)	Screw	Key (mm)
391.B01F-020	5631 052-01	3212 010-361	3021 010-050 (5.0)	3212 010-413	3021 010-060 (6.0)

	6	7[1]	8[2]	9	10
Extension slide	Washer	Varilock adapter	Bushing	Screw	Key (mm)
391.B01F-020	3411 011-084	391.610-40 80 053	5541 018-01	3212 010-411	3021 010-060 (6.0)

1) Varilock adapter. Must be ordered separately.
2) For use with milling arbor. Must be ordered separately.

CoroBore® 825
Fine boring head and cartridge

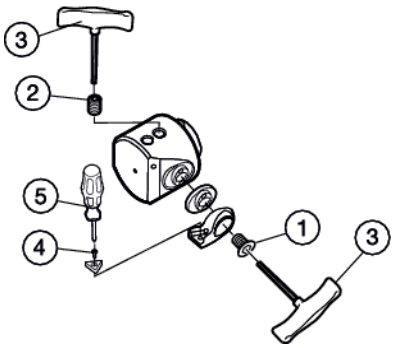

	1	2	3[1]
Fine boring head	Screw for cartridge	Locking screw	Key (mm)
A28-R825C-046025A	5513 010-08	5519 026-10	265.2-821 (4.0)

	4	5[1]
Cartridge	Insert screw	Key (Torx Plus)
A28-R825C-046025A	5513 020-03	5680 046-03 (7IP)

1) Accessories, must be ordered separately.

CoroBore® 825 XL/CoroBore® 826 XL

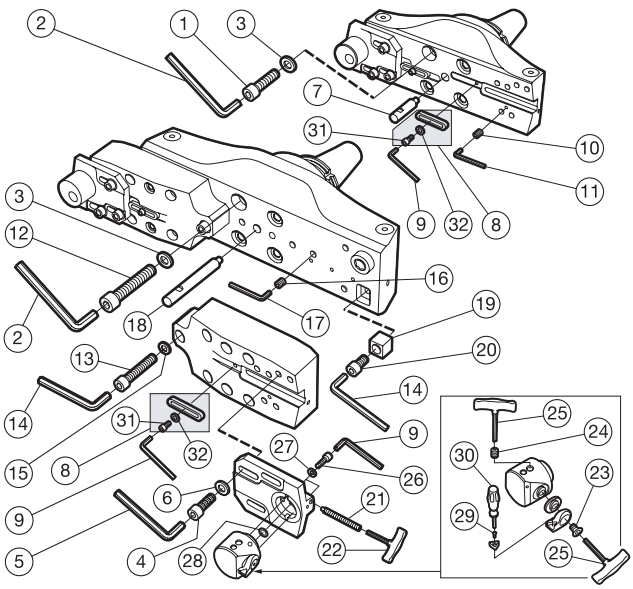

Bridge	1	2[1]	3	4	5[1]
Bridge sizes M, N and O	Screw	Key (mm)	Washer	Screw	Key (mm)
	3212 010-569	3021 010-140 (14)	3411 012-170	3212 010-462	3021 010-080 (8.0)

6	7	8[1]	9[1]	10	11[1]
Cup spring	Parallel pin set	Stop plate set	Key (mm)	Screw	Key (mm)
3846 010-069	5552 047-01	5335 001-01	3021 010-050 (5.0)	3214 010-355	3021 010-030 (3.0)

Bridge	2[1]	3	12	13	14[1]
Bridge sizes P, Q and R	Key (mm)	Washer	Screw	Screw	Key
	3021 010-140 (14.0)	3411 012-170	3212 010-572	3212 010-518	3021 010-100 (10.0)

15	16	17[1]	18	19	20
Washer	Screw	Key	Parallel pin set	Driving key	Screw
3411 012-130	3214 010-406	3021 010-040 (4.0)	5552 047-02	3193 110-050	3212 010-511

Bridge extension	4	5[1]	6	8[1]	9[1]
	Screw	Key (mm)	Cup spring	Stop plate set	Key (mm)
A35-RXLS24-A 060	3212 010-462	3021 010-080 (8.0)	3846 010-069	5335 001-01	3021 010-050 (5.0)

Cartridge	29	30[1]
	Insert screw	Key (Torx Plus)
R825C TC..1103, TC..1102, TP..11	5513 020-03	5680 046-03 (7IP)
R825C CC..09T3	5513 020-09	5680 046-02 (15IP)

Slide	21	22[1]
	Screw	Key (mm)
S24-R820XLS12-012	3214 020-368	265.2-817 (3.0)

Fine boring head	9[1]	23	24	25[1]	26	27	28
A34-R825C... A34-R826C...	Key (mm)	Screw for cartridge	Locking screw	Key (mm)	Screw	Washer	O-ring
	3021 010-050 (5)	5513 010-08	5519 026-10	265.2-021 (4.0)	3212 010-360	3411 010-064	3671 010-016

8. Stop plate set[1]	9[1]	31	32
	Key (mm)	Screw	Washer
5335 001-01	3021 010-050 (5)	3212 010-359	3411 011-064

[1] Accessories, must be ordered separately.

SANDVIK Coromant

CoroBore® XL holders

Spare parts for CoroBore XL holders

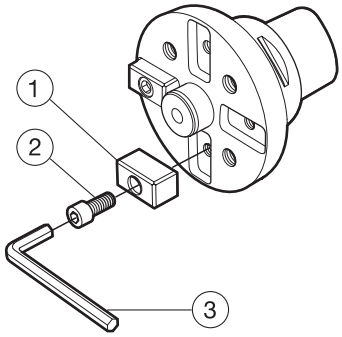

Coromant Capto®
Cx-391.XL

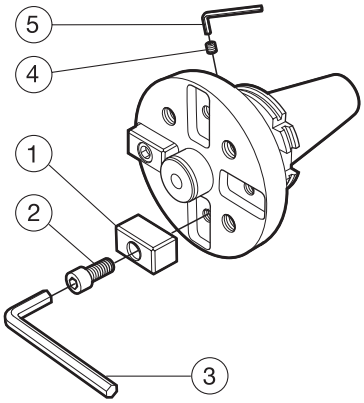

Solid holders
392.644/645/646XL

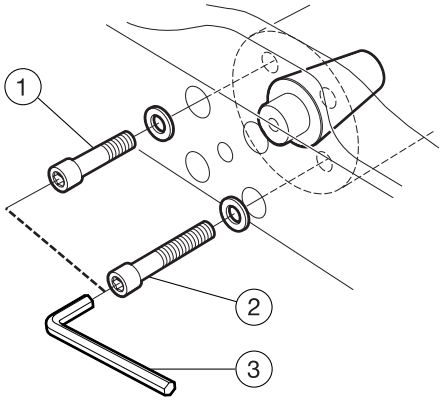

Centering plug
392.647XL

Holder	1 Driving key	2 Screw	3[1)] Key (mm)	4 Screw	5[1)] Key (mm)
C-391.XL	3193 110-060	3212 010-511	3021 010-100 (10)	-	-
392.644XL, 392.646XL, A392.645XL	3193 110-060	3212 010-511	3021 010-100 (10)	3214 010-406	3021 010-040 (4)

[1)] Accessories, must be ordered separately

Centering plug	1[1)] Screw (for bridge sizes M, N and O)	2[1)] Screw (for bridge sizes P, Q and R)	3[1)] Key (inch)
392.647XL-5040 A392.647XL-5040	[2)] 3212 031-762	[2)] 3212 031-766	[2)] (1/2")

[1)] Accessories, must be ordered separately

[2)] Metric screws are delivered with the boring bridge, see page F49

Shim set

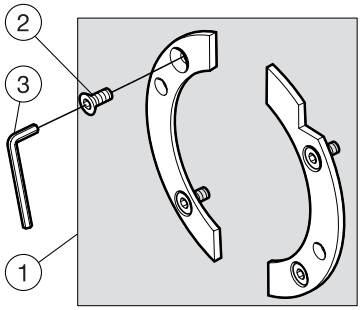

1[1)] Shim set [2)]	2 Screw	3[1)] Key
5549 128-50	3213 011-256	3021 010-025 (2.5)

[1)] Accessories, must be ordered separately

[2)] All CoroBore XL solid holders have ground backside of flange and threads for the option to mount a shim to increase stability if needed. Shim needs to be ordered separately and ground to fit the specific machine and holder.

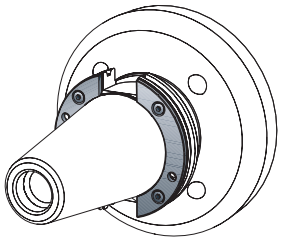

Fine boring head

Cx-391.37A
Cx-391.37B
392.410 37A
392.410 37B

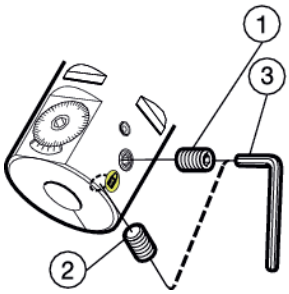

Shank diameter	1	2	3[1]
dm_m, mm (inch)	Locking screw	Screw for bar	Key (mm)
12 (.472)	5519 026-10	3214 010-407	265.2-821 (4.0)
16 (.630)	470-872	3214 010-408	265.2-821 (4.0)
20 (.787)	5519 026-07	3214 010-458	5680 017-04 (5.0)
25 (.984)	470-874	3214 010-458	5680 017-04 (5.0)

1) Accessories, must be ordered separately.

Boring bars for fine boring head

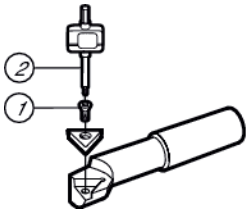

	1	2[1]
Boring bar type	Insert screw	Key
R429U-A16-08028 TC06A	5513 020-44	5680 051-01 (6IP)
R429U-A16-11039 TC06A	5513 020-44	5680 051-01 (6IP)
R429U-A16-14049 TC09A	5513 020-47	5680 046-03 (7IP)
R429U-A16-17056 TC09A	5513 020-47	5680 046-03 (7IP)
R429U-A16-20056TC09A	5513 020-47	5680 046-03 (7IP)
R429U-A16-23056 TC09A	5513 020-47	5680 046-03 (7IP)
R429U-A16-26056 TC09A	5513 020-47	5680 046-03 (7IP)
R429U-A20-17060 TC09A	5513 020-47	5680 046-03 (7IP)
R429U-A20-20070 TC09A	5513 020-47	5680 046-03 (7IP)
R429U-A20-23070 TC09A	5513 020-47	5680 046-03 (7IP)
R429U-A20-26070 TC09A	5513 020-47	5680 046-03 (7IP)
R429U-A25-23081 TC09A	5513 020-47	5680 046-03 (7IP)
R429U-A25-26088 TC09A	5513 020-47	5680 046-03 (7IP)
R429U-A25-29088 TC09A	5513 020-03	5680 046-03 (7IP)
R429U-A25-32088 TC09A	5513 020-03	5680 046-03 (7IP)
R429.90-08-024-06-AB	5513 020-28	5680 051-01 (6IP)
R429.90-11-033-06-AC	5513 020-27	5680 051-01 (6IP)
R429.90-14-040-09-AC	5513 020-05	5680 051-02 (7IP)
R429.90-17-040-09-AC	5513 020-05	5680 051-02 (7IP)
R429.90-20-040-09-AC	5513 020-05	5680 051-02 (7IP)
R429.91-06-049-06-AA	5513 020-28	5680 051-01 (6IP)
R429.91-08-059-06-AA	5513 020-27	5680 051-01 (6IP)
R429.91-10-079-09-AA	5513 020-05	5680 046-03 (7IP)
R429.91-12-099-09-AA	5513 020-05	5680 046-03 (7IP)
R429.91-16-109-11-AA	5513 020-05	5680 046-03 (7IP)
R429U-A08-024TP06A	5513 020-44	5680 051-01 (6IP)
R429U-A11-033TP06A	5513 020-44	5680 051-01 (6IP)
R429U-A14-040TP09A	5513 020-47	5680 046-03 (7IP)
R429U-A17-040TP09A	5513 020-47	5680 046-03 (7IP)
R429U-A20-040TP09A	5513 020-47	5680 046-03 (7IP)
R429U-A12-08040TP06A	5513 020-44	5680 051-01 (6IP)
R429U-A12-11055TP06A	5513 020-44	5680 051-01 (6IP)
R429U-A12-14060TP09A	5513 020-47	5680 046-03 (7IP)
R429U-A12-17060TP09A	5513 020-47	5680 046-03 (7IP)
R429U-A12-20060TP09A	5513 020-47	5680 046-03 (7IP)
R429U-A16-08040TP06A	5513 020-44	5680 051-01 (6IP)
R429U-A16-11055TP06A	5513 020-44	5680 051-01 (6IP)
R429U-A16-14070TP09A	5513 020-47	5680 046-03 (7IP)
R429U-A16-17080TP09A	5513 020-47	5680 046-03 (7IP)
R429U-A16-20080TP09A	5513 020-47	5680 046-03 (7IP)
R429U-A16-23080TP09A	5513 020-47	5680 046-03 (7IP)
R429U-A16-26080TP09A	5513 020-47	5680 046-03 (7IP)

1) Accessories, must be ordered separately.

Fine boring unit R/L148C

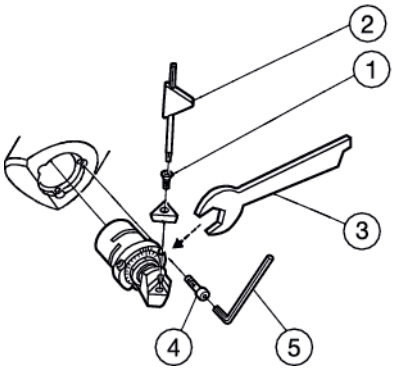

R/L148C Insert size	1	2	3	4	5[1]	Accessories[1]	
	Insert screw	Key (Torx Plus)	Setting key	Mounting screw	Key (mm)	Screwdriver (Torx Plus)	Mounting/repair fixture
06 (1.2)	5513 020-27	5680 051-01 (6IP)	148C-840-10	5513 020-04	5680 046-04 (9IP)	5680 046-08 (6IP)	148A-201
09 (1.8)	5513 020-05	5680 051-02 (7IP)	148C-840-13	5513 020-04	5680 046-04 (9IP)	5680 046-03 (7IP)	148A-202
11 (2)	5513 020-03	5680 051-01 (7IP)	148C-840-15	5513 020-29	5680 046-02 (15IP)	5680 046-03 (7IP)	148A-203
16 (2)	5513 020-10	5680 049-01 (T15)	148C-840-22	3213 010-349	174.1-864 (3.0)	5680 046-02 (15IP)	148A-204
06 (2)	5513 020-03	5680 051-02 (7IP)	148C-840-10	5513 020-04	5680 046-04 (9IP)	5680 046-03 (7IP)	148A-201

[1] Accessories, must be ordered separately.

Single edge fine boring tool 391.38A and 391.39A

Boring diameter 25.0 - 103.5 mm (.984 - 4.075 inch)

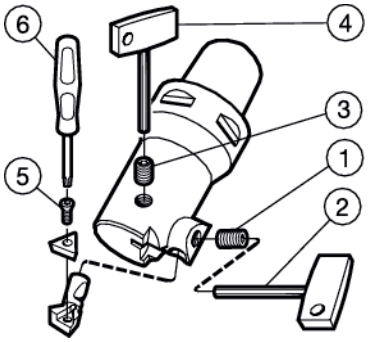

	1	2[1]	3		4[1]
Boring diameter	Screw for cartridge	Key (mm)	Locking screw	Torque Nm	Key (mm)
25.0 - 35.5	5514 042-05	265.2-815 (2.5)	5519 026-04	1.2	265.2-815 (2.5)
34.5 - 50.5	5514 042-05	265.2-815 (2.5)	5519 026-05	1.2	265.2-815 (2.5)
49.5 - 71.5	5514 020-07	265.2-821 (4.0)	5519 026-06	2.8	265.2-821 (4.0)
70.5 - 103.5	5514 020-07	265.2-821 (4.0)	470-873	2.8	265.2-821 (4.0)

1) Accessories, must be ordered separately.

Boring diameter 99.5 - 269.5 mm (3.917-10.610 inch)

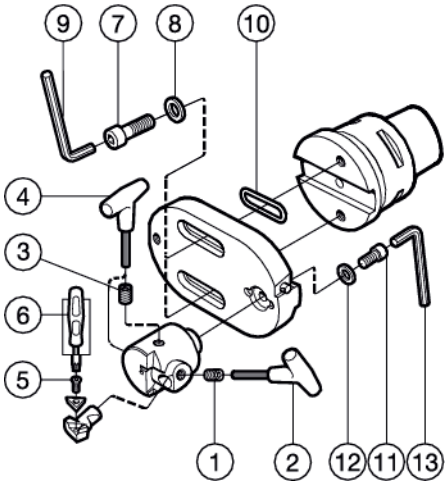

	1	2.4[1]	3	7	8
Boring diameter	Screw for cartridge	Key (mm)	Locking screw	Mounting screw	Washer
99.5-269.5	5514 020-07	265.821 (4.0)	5519 026-06	3212 010-412	3411 011-084

	9[1]	10	11	12	13[1]
Boring diameter	Key (mm)	O-ring	Screw for boring head	Washer	Key (mm)
99.5-164.5	3021 010-060 (6.0)	3671 010-026	3212 010-411	3411 011-084	3021 010-060 (6.0)
163.5-269.5	3021 010-060 (6.0)	3671 010-030	3212 010-411	3411 011-084	3021 010-060 (6.0)

Insert clamping

Insert size		5	6[1]
▱	△	Screw for insert	Key (Torx Plus)
06 (2)		5513 020-03	5680 046-03 (7IP)
09 (3)		5513 020-09	5680 046-02 (15IP)
	09 (1.8)	5513 020-05	5680 046-03 (7IP)
	11 (2)	5513 020-03	5680 046-03 (7IP)

1) Accessories, must be ordered separately.

Arbor adapter 391.38A

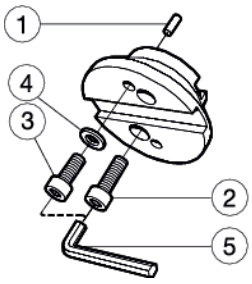

	1	2	3	4	5[1]
Adapter	Tension pin	Screw	Screw	Washer	Key (mm)
393.39A-0-27 033A	3113 030-508	3212 010-413	3212 010-412	3411 011-084	3021 010-060 (6.0)
393.39A-0-32 036A					

1) Accessories, must be ordered separately.

Fine boring head and cartridge 391.38A

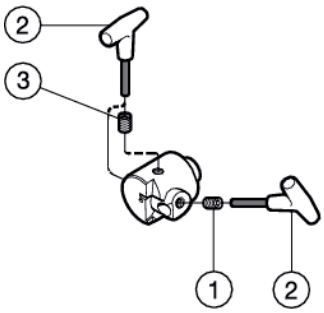

	1	2[1]	3
Fine boring head	Screw for cartridge	Key (mm)	Locking screw
391.38A	5514 020-07	265.2-821 (4.0)	5519 026-06

Insert size		1	2[1]
△	▱	Insert screw	Key (Torx Plus)
11		5513 020-03	5680 046-03 (7IP)
	09	5513 020-10	5680 046-02 (15IP)

Insert clamping
CoroTurn® 107
CoroTurn® 111

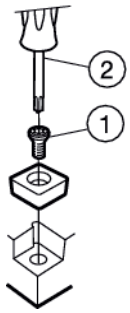
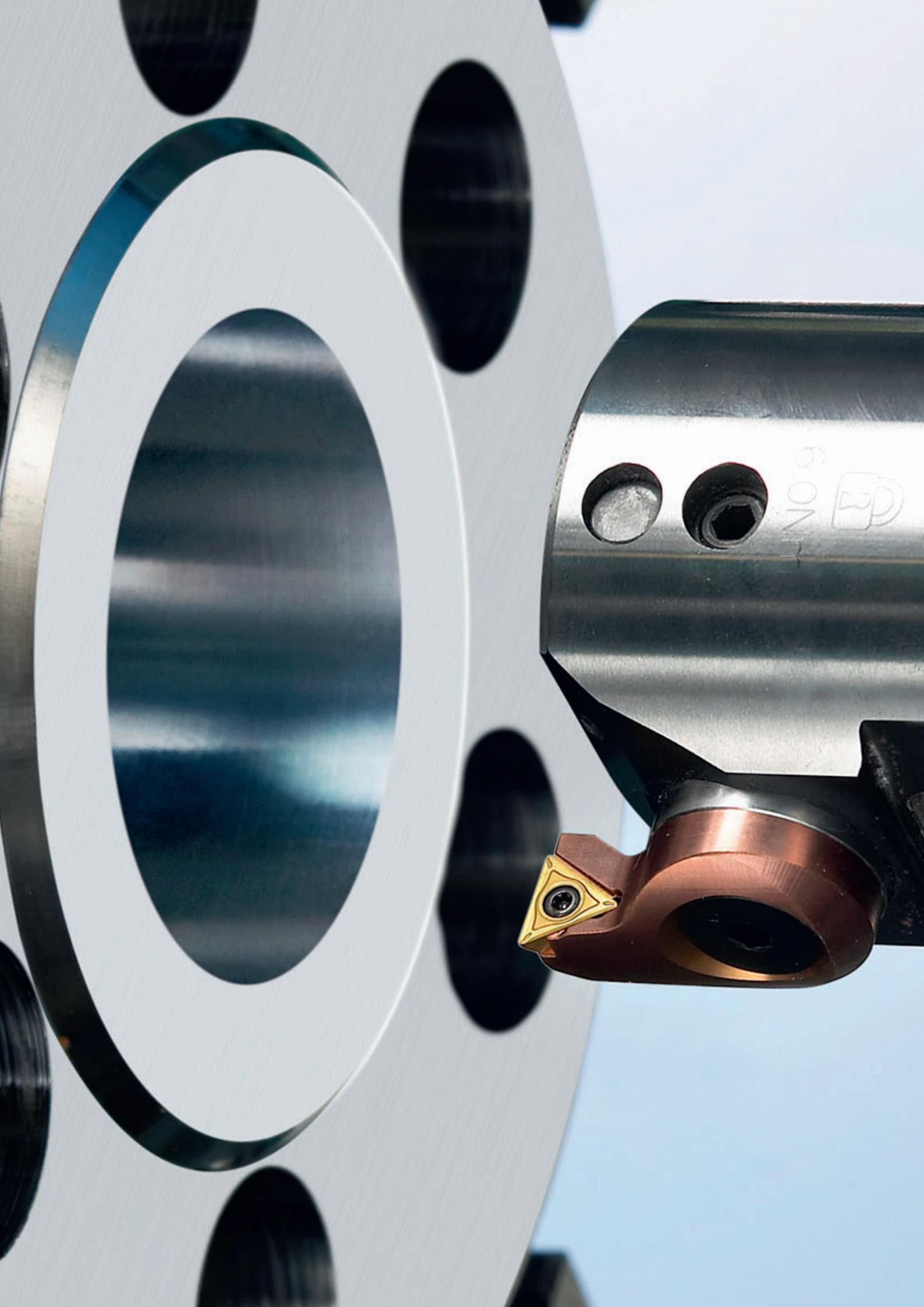
SANDVIK Coromant