SH. 1 OF 1	CAT NO 120-12	CUSTOMER DIMENSIONS	DO NOT SEPARATE PRINT FROM WORK	SIZE	RANGE: 0-12" GRADUATIONS:.001"

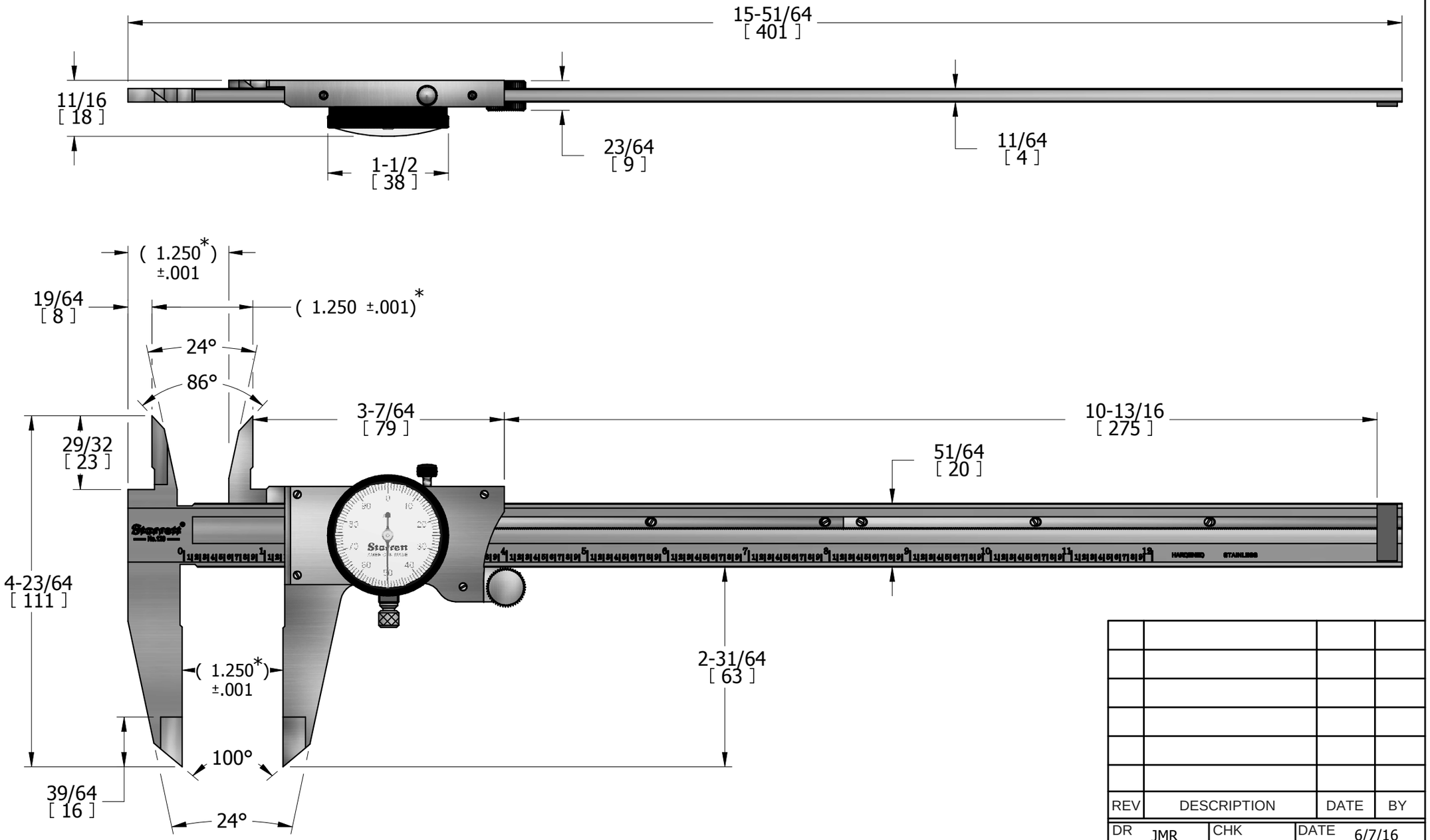

*=Accuracy (in): 0-6" (+/-.001") 6-12" (+/-.0015")

[mm]

REV	DESCRIPTION	DATE	BY

DR JMR	CHK	DATE 6/7/16

DIAL CALIPER ASSEMBLY

TOLERANCES - UNLESS OTHERWISE SPECIFIED	1 PLACE DEC. or REF. : +/- .015" --- 0.4 mm 2 PLACE DEC. : +/- .010" --- 0.25 mm	3 PLACE DEC. : +/- .003" --- 0.08 mm 4 PLACE DEC. : +/- .0005" --- 0.01 mm	FRACTIONAL: +/- 1/64" ANGULAR: +/- 1 DEGREE	THE L.S. STARRETT CO. ATHOL, MASS.