SH. 1 OF 1	CAT NO 1X-7	CUSTOMER DIMENSIONS	DO NOT SEPARATE PRINT FROM WORK	LOT NO

OPER	TOOLS

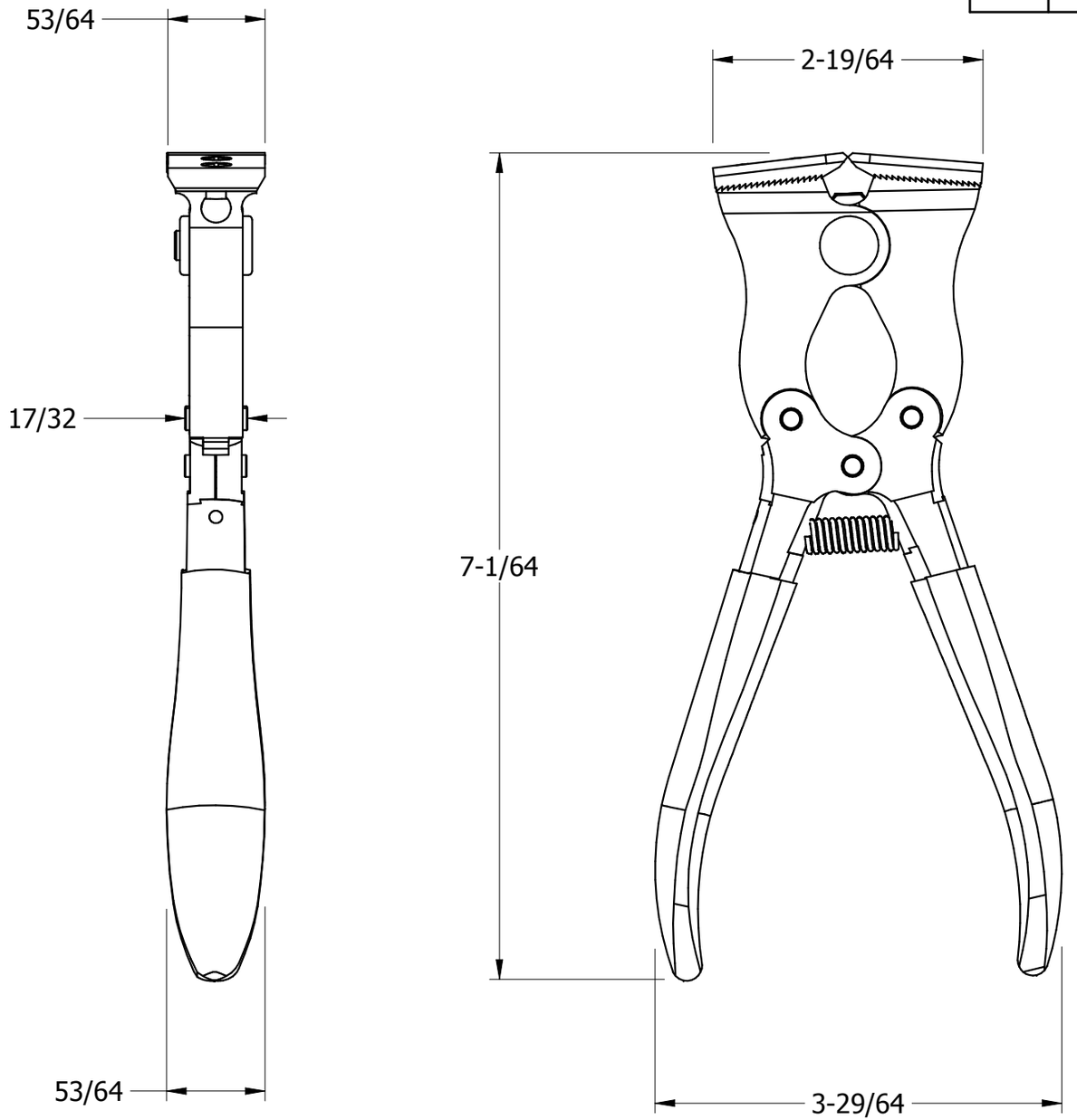

REV	DESCRIPTION	DATE	BY

DR VTG	CHK	DATE

CUT NIPPER ASSEMBLY

FRACTIONAL TOLERANCE +- 1/64 UNLESS OTHERWISE NOTED

THE L.S. STARRETT CO.
ATHOL, MASS.