SH. 1 OF 1	CAT NO 91D	CUSTOMER DIMS	DO NOT SEPARATE PRINT FROM WORK	LOT NO

OPER	TOOLS

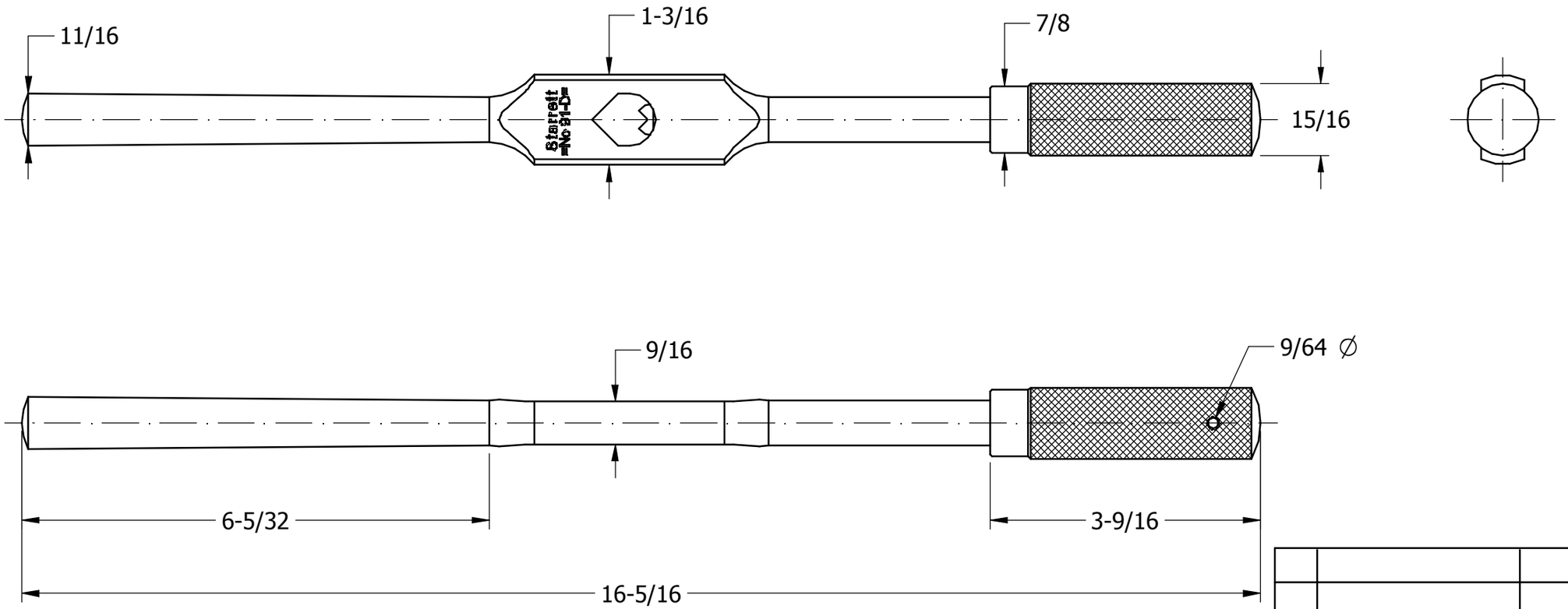

CAPACITY - 13/64" SQ. TO 7/16" SQ.

REV	DESCRIPTION	DATE	BY

CAT NO 91	SIZE D	
DR	CHK	DATE

TAP WRENCH ASSEMBLY

FRACTIONAL TOLERANCE +- 1/64 UNLESS OTHERWISE NOTED

THE L.S. STARRETT CO.
ATHOL, MASS.